Neve

A Siemens Company

Technical Handbook

for the

33609/C Limiter/Compressor

Cambridge House, Melbourn
Royston, Hertfordshire SG8 6AU
England.

Telephone: (0763) 260776
Cables: Neve Cambridge
Facsimile: (0763) 261886

Neve

Neve
Electronics
International
Limited

A Siemens Company

Technical Handbook

for the

33609/C Limiter/Compressor

Neve Electronics International Ltd.
Melbourn, Royston,
Hertfordshire SG8 6AU England
Tel: Royston (0763) 260776
Fax: Royston (0763) 261886

Rupert Neve Inc.
Berkshire Industrial Park,
Bethel, Connecticut 06801, U.S.A
Telephone: (203) 744-6230
Fax: (203) 792-7863
Telex: 969638

Rupert Neve Inc.
P.O. Box 40108, Nashville,
Tennessee 37204, U.S.A.
Telephone: (615) 385-2727
Telex: 786569

Rupert Neve Inc.
7533 Sunset Boulevard, Hollywood,
California 90046, U.S.A.
Telephone: (213) 874-8124
Fax: (213) 874-1406

Printed in England

Limiter/Compressor Technical Handbook

Contents

		Page
1	Limiter/Compressor Unit (33609/C)	1 - 1
	Introduction	1 - 1
	Mains Power Supply	1 - 1
	Specification	1 - 2
	Uses	1 - 4
	Variant Information	1 - 4
	Associated Drawings	1 - 4
2	Switch Assembly Information	2 - 1
3	Limiter/Compressor Board (11475)	3 - 1
	Limiting	3 - 1
	Compression	3 - 2
	Gain Make-Up	3 - 2
	Variant Information	3 - 2
	Associated Drawings	3 - 2
4	Power Amplifier (10640)	4 - 1
	Circuit Description	4 - 1
	Specification	4 - 1
	Variant Information	4 - 1
	Associated Drawings	4 - 2
5	Limiter/Compressor 24V Power Supply Unit (11606)	5 - 1
	Variant Information	5 - 1
	Associated Drawings	5 - 1

Limiter/Compressor Technical Handbook

1 Limiter/Compressor Unit (33609)

Note: This document refers to the /C variant of the limiter/compressor unit. For information concerning the other variants refer to the **Uses** and **Variant Information** sections.

Introduction

The limiter/compressor unit contains two identical, isolated channels which are suitable for stereo, quad or independent operation; units can be linked for multi-channel use. In multiple installations, each channel may be used independently or switched for ganged operation in stereo or quad modes. When limiting and compression is not required, each channel may be by-passed by the operation of a front panel switch.

The limiter/compressor unit contains the following four identifiable sections:

- Limiter/Compressor board (11475): This is a mother board which contains the attenuator control element, the 10640 amplifier and the limiting and compression sidechain electronics.

- The external control potentiometers, switches and gain reduction meters (which indicate the overall gain reduction in each channel during limiting and compression) are mounted on the front panel.

- Input and output sockets mounted on the rear panel.

- Types 33609/C: A mains power supply unit, incorporating PSU board 11606 which provides a stabilised +24V and V supply to the 11475 board.

Limiter/Compressor Board (11475)

This board contains the main audio signal processing circuits of the limiter/compressor unit. The operation of the board is described elsewhere.

Front Panel Switches

The rotary control switches located on the front panel of the unit are multi-contact multi-layer rotary switches. Electrical loading of the switches is provided via resistors connected across the contacts. The assembly drawing TP???? and the associated parts lists designate the configuration of the switches.

Mains Power Supply

The 24V DC input, derived from the main supply, required by the limiter/compressor board (11475) is supplied by a power

supply unit located in the limiter/compressor unit. The power supply unit comprises a toroidal mains input transformer (TF14201), a regulator circuit board (11606) and associated components. The arrangement is shown as part of the limiter/compressor block diagram EB20515.

Mains power is applied via an IEC inlet connector to the front panel mounted switch **POWER**. The switch illuminates when the unit is switched on. Input voltages of 100V, 120V, 220V or 240V AC can be selected using the voltage selector mounted on the rear panel. Primary circuit protection is provided by a 125mA anti-surge fuse for 220V or 240V operation or a 250mA anti-surge fuse for 100V and 120V operation; the fuse is located in the body of the voltage selector.

The 24V AC output of the toroidal transformer is connected to the secondary protection fuse, a 250mA anti-surge type, mounted on the rear panel of the unit.

Specification

Frequency Response	20Hz to 20kHz ±0.5dB, measured at 0dBu relative to 1kHz.
Noise	-75dBu with input terminated in 600 ohms, by-passed IN, compress and limit OFF; -55dBu with compress IN and gain make-up at maximum.
Limit Level	+4dBu to +15dBu, measured with limit recovery set at 50ms, level at +8dBu using a 1kHz sine-wave at +20dBu and +8 control adjusted to give +8dBu output.
Limit Ratio	with input level at 10dBu, increased to +20dBu the change in output level should be 0.1dB, ±0.1dB.
Attack Time	slow: 4ms, ±1ms fast: 2ms, ±1ms being the time taken for a signal to return to within 1dB of its original value, using an increase in input level of 10dB on an input adjusted to +10dBu at 1kHz.
Recovery Time	this is the time taken by the control voltage to reach a new value when an input at +20dBu is reduced in value by 10dB. The recovery times can be set to 50ms, 100ms, 200ms, 800ms, AUTO 1 800ms, AUTO 2 8ms (all ±50%)
Gain Make-up	settings 0 to 20dB correspond with output level ±0.5dB.

Compress Ratio

recovery set to 100ms
threshold to -20dBu
input 1kHz at 0dBu
for each setting of the Compress Ratio Switch the input level is increased by 10dB and the change in output level should be:

Compress Ratio Switch	O/P Level Change (dBu)	Tolerance (dB)
1.5:1	6.5	±1
2:1	5.0	±1
3:1	3.5	±1
4:1	2.5	±0.5
6:1	1.5	±0.5

Compress Recovery

100ms, 400ms, 800ms, 1.5s
AUTO 1 500ms, AUTO 2 2s

Distortion

0.075% maximum (bypass IN, Compress and Limit OUT, input level at +9dBu, 1kHz.)

0.2% maximum (Compress IN ratio 6:1, Gain make-up to MAX, Recovery 800ms, Threshold -18dBu).

0.45% maximum (Limit IN, Compress OUT Recovery 800ms. Input level +22dBu, Threshold -18dBu).

Power Consumption

5.3VA

Dimensions

Length: 482mm (19in)
Height: 88mm (3.26in)
Depth: 255mm (10.03in)

Uses

Module Number + Variant	Variant				Module Number + Variant	Variant			
	33069	/A	/B	/C		33069	/A	/B	/C
10190	Plain	-	Plain	-	20235	Plain	-	Plain	Plain
10475	/C	-	/C	-	20236	Plain	-	Plain	Plain
10640	-	-	-	Plain	20237	Plain	-	Plain	Plain
11475	-	-	-	Plain	20238	Plain	-	Plain	Plain
11606	-	-	-	Plain	60055	Plain	-	Plain	Plain
20233	Plain	-	Plain	Plain	/KOP	Plain	-	/C	/C
20234	Plain	-	Plain	Plain					

Variant Information

Plain and /B: See separate Limiter/Compressor handbook

/A: Information not available

/C: As above

Associated Drawings

Parts List: PN33609/C
Kit of Parts: PN33609/C/KOP
Block Diagram: EB20515
Wiring Diagram: ET21069
Panel (Front and Rear) Layouts: MR60237

PARENT ITEM NO. PN33609/C
DESCRIPTION LIMITER COMPRESSOR ASSEMBLY
ENGR DRAW PN33609/C ISS.A
STANDARD BATCH QUANTITY 1.000
QTY 1 ITEM TYPE 1 UNIT MEAS EA LOW LEVEL 00 PLANNER 52

LL CD	SEQ NO.	COMPONENT ITEM NO.		DESCRIPTION	ENGINEERING DRAWING NUMBER	QUANTITY PER	ITEM UM	TYP	OPT NO.	FIRST OP SEQ	LT ADJ	EFFECTIVE DATES FROM	TO
07		*		MANUFACTURING INFO./COMMENTS	FOR INFO. ONLY	.000	EA	4					
08		*C		CHANGE NOTE HISTORY		.000	EA	4					
							ISS.A	ST	6/9/89				
04		PL10640	K	BA640 POWER AMPLIFIER	PL10640 ISS.A	2.000	EA	1			15		
01		PL11475	K	LIMITER COMPRESSOR PCB	PL11475 ISS.1	2.000	EA	1			15		
01		PL11606	K	LIMITER COMPRESSOR PSU PCB	PL11606 ISS.A	1.000	EA	1			15		
03		PL20233	K	EK20233 COMP RATIO SW ASSY	PL20233 ISS.3	2.000	EA	1			15		
03		PL20234	K	EK20234 GAIN MAKE UP SW ASSY	PL20234 ISS.3	2.000	EA	1			15		
03		PL20235	K	EK20235 COMPRESS THRESHOLD SW	PL20235 ISS.3	2.000	EA	1			15		
03		PL20236	K	EK20236 COMPRESS RECOVERY SW.	PL20236 ISS.2	2.000	EA	1			15		
03		PL20237	K	EK20237 LIMIT RECOVERY SWITCH.	PL20237 ISS.3	2.000	EA	1			15		
03		PL20238	K	EK20238 LIMIT LEVEL SWITCH.	PL20238 ISS.3	2.000	EA	1			15		
01		PL60055	K	SPARE FUSE KIT FOR PN33609	PL60055 ISS.A	1.000	EA	1			15		
01		PN33609/C/KOP	K	KOP FOR LIMITER COMPRESSOR	PN33609/C/KOP.1	1.000	EA	1			15		

PARENT ITEM NO. PN33609/C/KOP K
DESCRIPTION KOP FOR LIMITER COMPRESSOR
ENGR DRAW PN33609/C/KOP.1
STANDARD BATCH QUANTITY 1.000
QTY 1 ITEM TYPE 1 LOW LEVEL 01
UNIT MEAS EA PLANNER 52

LL CD	SEQ NO.	COMPONENT ITEM NO.	DESCRIPTION	ENGINEERING DRAWING NUMBER	QUANTITY PER	ITEM UM	TYP	OPT NO.	FIRST OP SEQ	LT ADJ	EFFECTIVE DATES FROM	TO
07		*	MANUFACTURING INFO./COMMENTS	FOR INFO. ONLY	.000	EA	4					
						SEE ET21069 WIRING DIAGRAM						
08		*C	CHANGE NOTE HISTORY		.000	EA	4					
						ISS.A ST 6/9/89 ISS.B 8/12/89						
						ISS.1 31529 7/6/90						
06		CN10072	3-PLG IEC 6A MAINS INLET PNLMT	SCHURTER 4300-0	1.000	EA	4					
05		CN10076	3-PLG FRE NEUTRIK NC-3MC XLR	NEUTRIK NC-3MC	2.000	EA	4					
05		CN10077	3-PLG FXT RET NEUTRIK NC-3MP	NEUTRIK NC-3MP	2.000	EA	4					
06		CN10181	9-PLG D-TYPE FIXED SOLDER	ITT CANN DE-9P	1.000	EA	4					
04		CN20071	3-SKT FRE 6A IEC MAINS INPUT	DELTRON TYPE525	1.000	EA	4					
05		CN20074	3-SKT FRE NEUTRIK NC-3FC	NEUTRIK NC-3FC	2.000	EA	4					
06		CN20075	3-SKT FXD RET NEUTRIK NC-3FP1	NEUTRIK NC-3FP1	2.000	EA	4					
06		CN20083	4 WAY SOCKET MOLEX I.D.T	MOLEX 2226-9041	3.000	EA	4					
06		CN20182	9-SKT D-TYPE FIXED SOLDER	ITT CANN DE-9S	1.000	EA	4					
05		CN20211	10-PLG .1IN IDC FRCTN LK HEDER	LUCAS 1300-110-	6.000	EA	4					
04		CN31105	9-WAY COVERFRE DEE TYPE CINCH	DEE UNIT CARR-	1.000	EA	4					
04		CN31110	9-WAY BASE&STRP DEE TY CINCH	DEE UNIT CARR-	1.000	EA	4					
06		CN31206	INSU BOOT 4IEC FXDMNS SKT RUBR	BELL LEE L1867-	2.000	EA	4					
						FOR MAINS INLET & POWER SWITCH						
02		FE10244	2U RACK HANDLE 62MM CENTRS XM5	SCHROFF 10502-0	2.000	EA	4					
06		FE12007	LABEL MODULE SER NO ADHE PLST	TO MG20510/2	1.000	EA	4					
06		FG10502	POP RIV 3/32DX0.2L DOME HD SS	TUCK TAP/03208S	4.000	EA	4					
						FOR SERIAL NUMBER PLATE						
06		FM10503	M2X12 CH SLOT HD SCW STEEL	BRI ZN&PASS	2.000	EA	4					
						FIX BA640 TO PL11475.						
06		FM11601	M3X8 CSK POZI HD SCW STEEL	BRI ZN&PASS	8.000	EA	4					
						FIXES XLR'S TO REAR PANEL.						
06		FM11607	M3X8 CSK POZI HD SCW STEEL BLK	ZN & CHEM BLACK	4.000	EA	4					
						FIXES FRONT PANEL TO CHASSIS.						
05		FM11608	M3X20 CSK POZI HD SCW STEEL BK	ZN & CHEM BLACK	1.000	EA	4					
						FIXES TRANSFORMER TO CHASSIS.						
06		FM11610	M3X12 CSK POZI HD SCW STEEL BK	ZN & CHEM BLACK	2.000	EA	4					
						FIXES IEC INLET TO REAR PANEL.						
05		FM11615	M3X6 PAN POZI HD SCW STEEL BLK	ZN & CHEM BLACK	25.000	EA	4					
						FIXES PCBS TO CHASSIS, COVER PLATE TO						
						CHASSIS, REAR PANEL TO CHASSIS.						
06		FM11617	M3X10 PAN POZI HD SCW STEEL BK	ZN & CHEM BLACK	5.000	EA	4					
						FIXES VOLTAGE SELECTOR AND D-TYPE TO						
						REAR PANEL & EARTH SCREW.						
06		FM11624	M3X12 PAN POZI HD SCW STEEL	BRI ZN&PASS	4.000	EA	4					
07		FM20030	M3 NUT PRESSED STEEL ZN&PASS	BRI ZN&PASS	11.000	EA	4					
						FIXES XLR'S AND D-TYPE TO REAR PANEL &						
						EARTH SCREW.						
07		FM21030	M3 WASHER STEEL BRI ZN &PASS	BRI ZN&PASS	12.000	EA	4					
						FITTED BETWEEN PCBS AND CHASSIS.						
04		FU10004	250MA LBC SLOWBLOW FUSE 20X5MM	BESWICK TDC 498	1.000	EA	4					
						SECONDARY FUSE						
05		FU12000	500MA FUSE QB 20X5 GLS LBC 250	BESWK & NCI	1.000	EA	4					

PARENT ITEM NO. PN33609/C/KOP K
DESCRIPTION KOP FOR LIMITER COMPRESSOR
ENGR DRAW PN33609/C/KOP.1
STANDARD BATCH QUANTITY 1.000
QTY 1 ITEM TYPE 1 LOW LEVEL 01
UNIT MEAS EA PLANNER 52

LL CD	SEQ NO.	COMPONENT ITEM NO.	DESCRIPTION	ENGINEERING DRAWING NUMBER	QUANTITY PER	ITEM UM	TYP	OPT NO.	FIRST OP SEQ	LT ADJ	EFFECTIVE DATES FROM	TO
						MAINS FUSE.						
06		FU18012	20MM FUSEHOLDER UL APPROV FEF	SCHURT 031.1085	1.000	EA	4					
						SECONDARY FUSEHOLDER						
06		FU19000	INSULAT RUBR BOOT 4 FUSEHOLDER	RS 544-106 IN 5	1.000	EA	4					
04		IM13702	SPCL SCL PPM MTR SIFAM D14	SIFAM D14 2 NCI	2.000	EA	4					
03		KA17403	15MM RND KNOB GREY 4MM SP	SIFAM S150-004-	6.000	EA	4					
03		KA17404	15MM RND KNOB GREY 6MM SP	SIFAM S150-006-	6.000	EA	4					
05		KA17426	15MM RND KNOB CAP BLU/WHT LINE	SIFAM C151/BLU	12.000	EA	4					
02		MR22750/1	FRONT PNL TO AW50838 & AW50805	A2 AA12005 21G	1.000	EA	9					
02		MR22751	INTER PANEL		1.000	EA	9					
02		MR22752	CHASSIS	A AA12002 20T	1.000	EA	9					
02		MR22753/1	REAR PANEL TO AW50839	A2 AA12002 21E	1.000	EA	9					
02		MR22754	COVER PLATE	A AA11012 10	1.000	EA	9					
04		SW10201	2P C/O TOGGLE SW FLAT TOG PCB	C&K TO NCI	8.000	EA	4					
04		SW10207	2P C/O 3POS TOGGLE SW FLAT PCB	C&K TO NCI	1.000	EA	4					
06		SW10500	2P ROCKER DPST RED ILLUM PNL	ARROW 2600HMR21	1.000	EA	4					
02		TF14021	MAINS TXF 25V .4A TORIODAL	TO NEVE EM20058	1.000	EA	4					
06		TF19201	VOLTAGE SELECTOR/FUSEHOLDER		1.000	EA	4					
05		WA12403	9.5MM DIA HEATSHRK SLEEVE BLCK	REMTEK DWP9.5B	.500	EA	4					
06		WA17203	6BA M3 SOLDER TAG SHAKEPROOF	ROSS COURT 475	2.000	EA	4					
						EARTH SCREW.						
06		WA18352	1/4 RECPTCLE TERMINL 1.5-205MM	HELL HL294-263	7.000	EA	4					
07		WR10000	BLK WR 7/0,2MM 0,22MMCSA TY2	BICC DEF61-12P6	1.200	MT	4					
06		WR10001	PNK WR 7/0,2MM 0,22MMCSA TYPE2	BICC DEF61-12P6	.600	MT	4					
07		WR10050	RED WR 7/0,2MM 0,22MMCSA TYPE2	BICC DEF61-12P6	.500	MT	4					
06		WR10051	RED/BLK WR 7/0,2MM 0,22CSA TY2	BICC DEF61-12P6	.600	MT	4					
06		WR10057	RED/GRN WR 7/0,2MM 0,22CSA TY2	BICC DEF61-12P6	.600	MT	4					
06		WR10060	RED/WHT WR 7/0,2MM 0,22CSA TY2	BICC DEF61-12P6	.600	MT	4					
06		WR10150	ORA WR 7/0,2MM 0,22CSA TYPE2	BICC DEF61-12P6	.600	MT	4					
05		WR10200	YEL WR 7/0,2MM 0,22CSA TYPE2	BICC DEF61-12P6	.600	MT	4					
06		WR10300	VLT WR 7/0,2MM 0,22CSA TYPE2	BICC DEF61-12P6	.600	MT	4					
05		WR10400	GRY WR 7/0,2MM 0,22CSA TYPE2	BICC DEF61-12P6	.600	MT	4					
06		WR10500	WHT WR 7/0,2MM 0,22CSA TYPE2	BICC DEF61-12P6	.200	MT	4					
06		WR11350	GRN WR 16/0,2MM 0,5CSA TY2	BICC DEF61-12P6	.100	MT	4					
06		WR13002	BLU WR 30/0.25MM 1.5CSA TRIRTD	BICC BS6231 CK	.700	MT	4					
05		WR13003	GRN/YEL WR 30/0.25 1.5MMSQ TRI	BICC BS6231 CK	.200	MT	4					
05		WR13005	BRN WR 30/0.25MM 1.5CSA TRIRTD	BICC BS6231 CK	.700	MT	4					
06		WR75100	1-COR CABLE S/LAP SCRN 7/,2MM	ADASTRA Z1 DAVU	1.300	MT	4					
07		WR77200	TWIN SCREEN AUDIO CABLE 24AWG	BRAND-REX GT-75	4.600	MT	4					

NET/ALOG1/USER/SIMONT/1.DRW 21 DEC 89 11:27 last update: 21 DEC 89 11:27

DRAWING No.	SHT	1 of 1
EB20515		

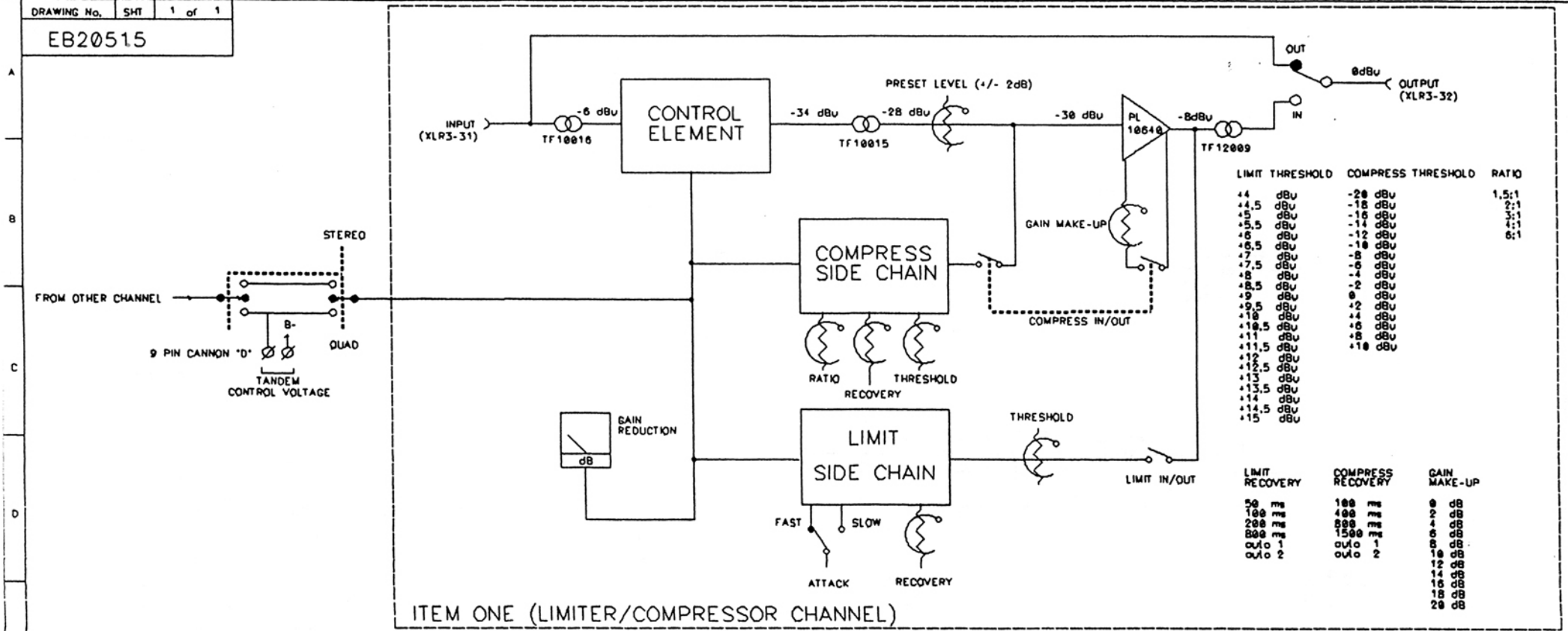

ITEM ONE (LIMITER/COMPRESSOR CHANNEL)

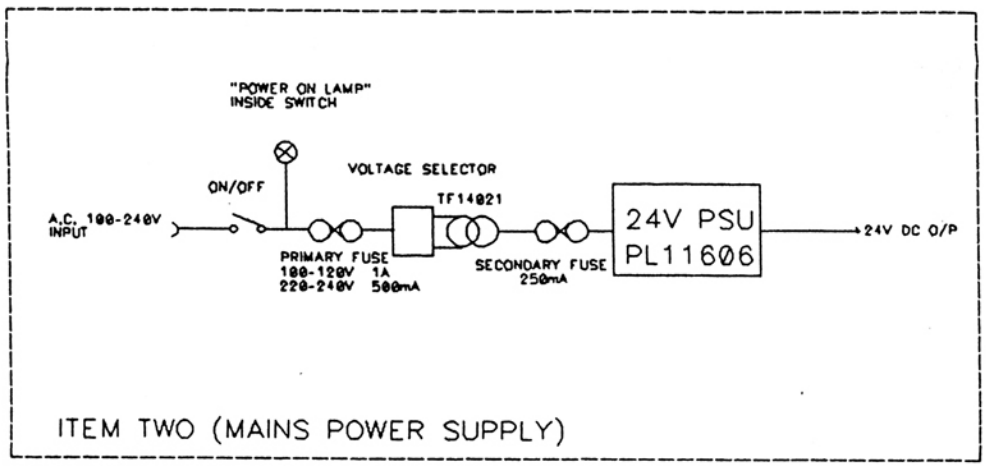

ITEM TWO (MAINS POWER SUPPLY)

PN33609/C COMPRISES 2 OFF ITEM ONE AND ONE OFF ITEM TWO

		A	Issue	Drn.	SIMON TULLETT	TITLE 33609/C LIMITER COMPRESSOR BLOCK DIAG.	USED ON	
		20/12/89	Date	Traced			Drg. No.	EB20515
			C.N. No.	Checked			SHT	1 of 1
			Checked	NEVE ELECTRONICS INT. Ltd. 19 89 ©				A2

DRAWING No. ET21069 SHT 1 of 1

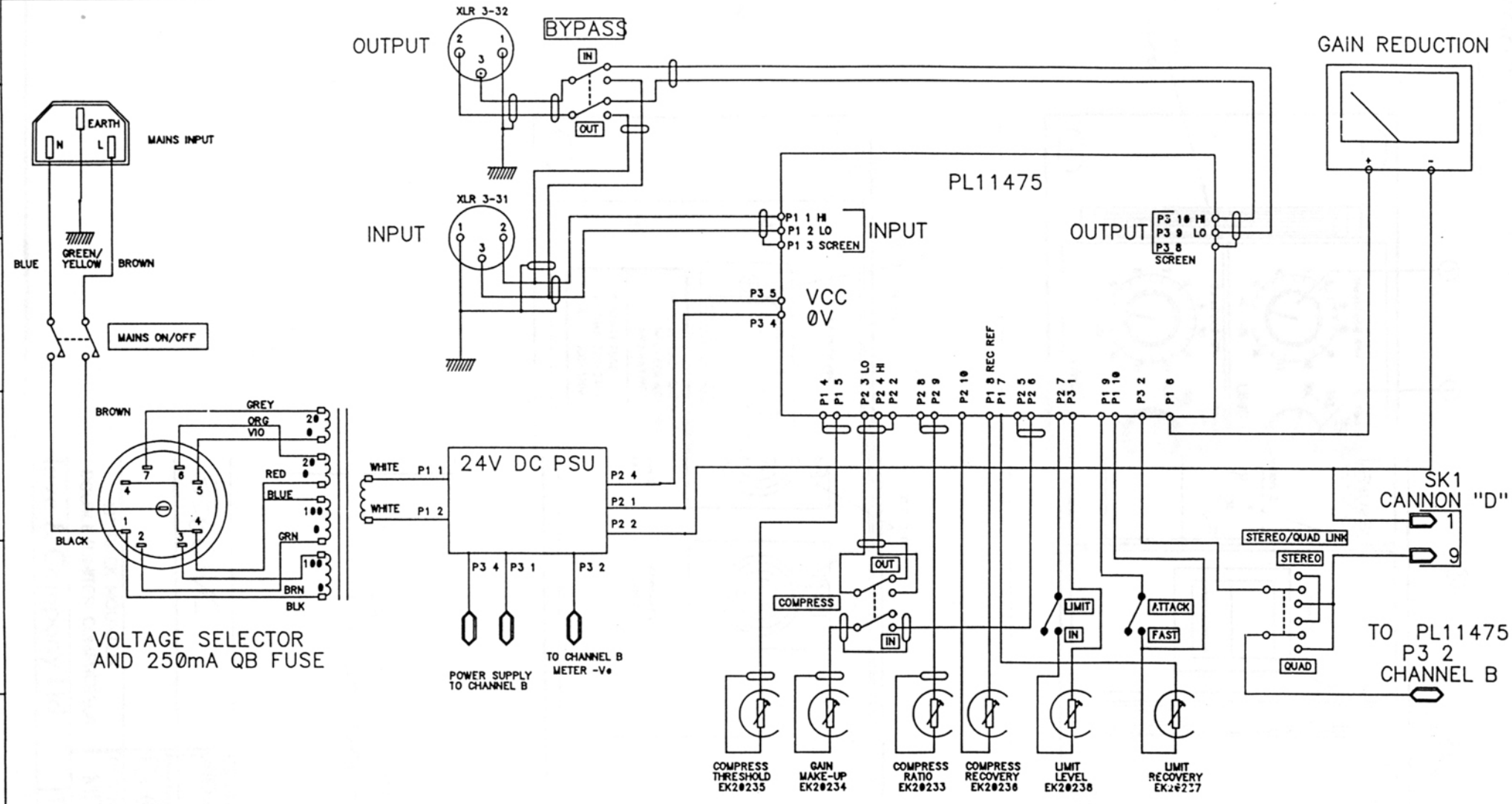

NOTE

CHANNEL A SHOWN. CHANNEL B WIRING IS IDENTICAL LINKING IN TO POWER SUPPLY AS SHOWN.

C	B	A	Issue	Drn.	CRH	TITLE LIMITER	USED ON	PN33609
6-9-89	30/6/89	9/12/88	Date	Traced		COMPRESSOR	Drg. No.	ET21069
	N/A		C.N. No.	Checked		WIRING DIAGRAM	SHT	1 of 1
Simon Tillett			Checked	NEVE ELECTRONICS INT. Ltd.			1988 ©	A2

DRAWING No.
MR 60237

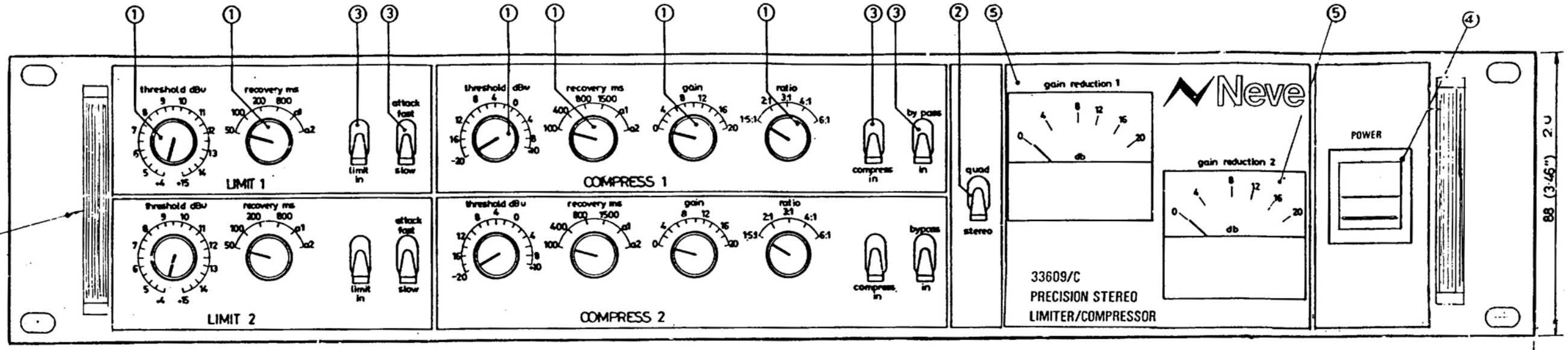

FRONT PANEL

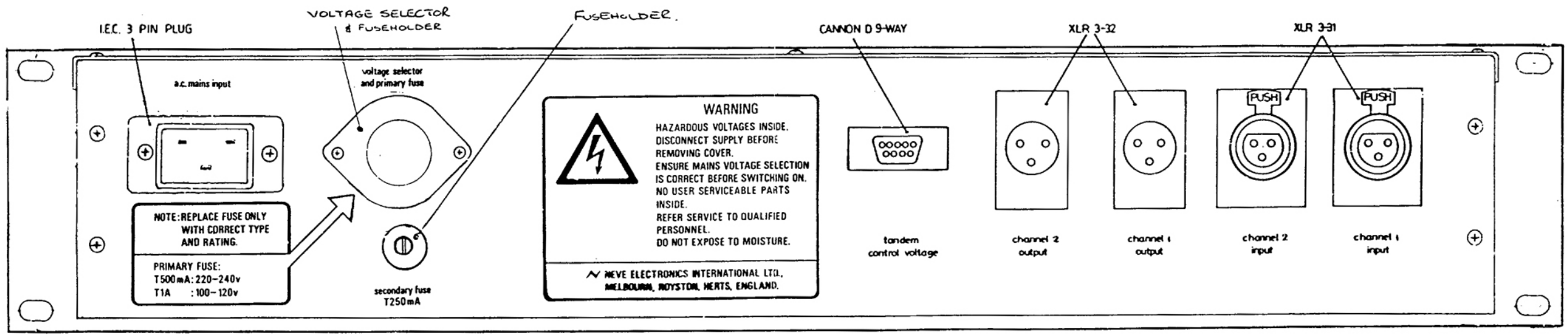

REAR VIEW

REAR VIEW

ITEM	DETAIL
1.	15mm DIA GREY KNOB - MEDIUM BLUE INSERT
2.	3 POSITION TOGGLE SWITCH
3.	2 " " "
4.	2 " ROCKER SWITCH ILLUM - RED.
5.	METER - SIFAM D14 (PPM)

UNIT DEPTH:- 258 mm (10.2")
UNIT WT:- 5Kg APPROX.

1	B	A	ISSUE	FIRST USED ON STANDARD	TYPE 33609/C	TOL. UNLESS OTHERWISE STATED: LINEAR ± ; ANGULAR ± ; HOLES +0.13 −0
22-01-90	5-12-89	13 JUN 89	DATE	DRN. MG	TYPE	3rd ANGLE PRJ. ; DIMS. IN mm (INS) ; SCALE 1:1
			CHANGE NOTE Nº	TRACED	TITLE 19" RACK MOUNTED DOUBLE/LIMITER COMPRESSOR	DRG. No. MR 60237
			CHECKED	CHECKED	Rupert Neve & Company Ltd.	1989 © A2

2 Switch Assembly Information

Assembly information for the following switches is included in this section:

Switch Function	Parts List	Assembly Drawing
Compress Ratio:	PL20233	EK20233
Gain Make-Up	PL20234	EK20234
Compress Threshold	PL20235	EK20235
Compress Recovery	PL20236	EK20236
Limit Recovery	PL20237	EK20237
Limit Level	PL20238	EK20238

PARENT ITEM NO. PL20233 K

DESCRIPTION EK20233 COMP RATIO SW ASSY
ENGR DRAW PL20233 ISS.3
STANDARD BATCH QUANTITY 1.000

QTY 1 ITEM TYPE 1 LOW LEVEL 03
UNIT MEAS EA PLANNER 52

LL CD	SEQ NO.	COMPONENT ITEM NO.	DESCRIPTION	ENGINEERING DRAWING NUMBER	QUANTITY PER	ITEM UM	TYP	OPT NO.	FIRST OP SEQ	LT ADJ	EFFECTIVE DATES FROM	TO
07		RA002K7	2K7 1% .25W RESISTOR METL FLM	EUROHM MF25	1.000	EA	4					
07		RA003K3	3K3 1% .25W RESISTOR METL FLM	EUROHM MF25	1.000	EA	4					
06		RA015K0	15K 1% .25W RESISTOR METL FLM	EUROHM MF25	1.000	EA	4					
06		RA820R0	820R 1% .25W RESISTOR METL FLM	EUROHM MF25	1.000	EA	4					
04		SR14300	2P-6W MBB SW ROT ADJ 4SP DIA	ELMA 01 AUNI	1.000	EA	4					

PARENT ITEM NO. PL20234 K

DESCRIPTION EK20234 GAIN MAKE UP SW ASSY
ENGR DRAW PL20234 ISS.3
STANDARD BATCH QUANTITY 1.000

QTY 1 ITEM TYPE 1 LOW LEVEL 03
UNIT MEAS EA PLANNER 52

LL CD	SEQ NO.	COMPONENT ITEM NO.	DESCRIPTION	ENGINEERING DRAWING NUMBER	QUANTITY PER	ITEM UM	TYP	OPT NO.	FIRST OP SEQ	LT ADJ	EFFECTIVE DATES FROM	TO
06		RA002K4	2K4 1% .25W RESISTOR METL FLM	EUROHM MF25	1.000	EA	4					
06		RA043R0	43R 1% .25W RESISTOR METL FLM	EUROHM MF25	1.000	EA	4					
06		RA051R0	51R 1% .25W RESISTOR METL FLM	EUROHM MF25	1.000	EA	4					
06		RA075R0	75R 1% .25W RESISTOR METL FLM	EUROHM MF25	1.000	EA	4					
06		RA091R0	91R 1% .25W RESISTOR METL FLM	EUROHM MF25	1.000	EA	4					
06		RA130R0	130R 1% .25W RESISTOR METL FLM	EUROHM MF25	1.000	EA	4					
06		RA160R0	160R 1% .25W RESISTOR METL FLM	EUROHM MF25	1.000	EA	4					
06		RA240R0	240R 1% .25W RESISTOR METL FLM	EUROHM MF25	1.000	EA	4					
07		RA390R0	390R 1% .25W RESISTOR METL FLM	EUROHM MF25	1.000	EA	4					
06		RA820R0	820R 1% .25W RESISTOR METL FLM	EUROHM MF25	1.000	EA	4					
04		SR10600	1P-23W MBB SW ROT ADJ 6SP DIA	ELMA 03/04 AUNI	1.000	EA	4					

PARENT ITEM NO. PL20235 K

DESCRIPTION EK20235 COMPRESS THRESHOLD SW
ENGR DRAW PL20235 ISS.3
STANDARD BATCH QUANTITY 1.000

QTY 1 ITEM TYPE 1 LOW LEVEL 03
UNIT MEAS EA PLANNER 52

LL CD	SEQ NO.	COMPONENT ITEM NO.	DESCRIPTION	ENGINEERING DRAWING NUMBER	QUANTITY PER	ITEM UM	TYP	OPT NO.	FIRST OP SEQ	LT ADJ	EFFECTIVE DATES FROM	TO
06		RA001K2	1K2 1% .25W RESISTOR METL FLM	EUROHM MF25	1.000	EA	4					
07		RA002K0	2K0 1% .25W RESISTOR METL FLM	EUROHM MF25	1.000	EA	4					
06		RA003K0	3K0 1% .25W RESISTOR METL FLM	EUROHM MF25	1.000	EA	4					
07		RA005K1	5K1 1% .25W RESISTOR METL FLM	EUROHM MF25	1.000	EA	4					
07		RA068R0	68R 1% .25W RESISTOR METL FLM	EUROHM MF25	1.000	EA	4					
06		RA075R0	75R 1% .25W RESISTOR METL FLM	EUROHM MF25	1.000	EA	4					
06		RA110R0	110R 1% .25W RESISTOR METL FLM	EUROHM MF25	1.000	EA	4					
06		RA130R0	130R 1% .25W RESISTOR METL FLM	EUROHM MF25	1.000	EA	4					
06		RA180R0	180R 1% .25W RESISTOR METL FLM	EUROHM MF25	1.000	EA	4					
06		RA200R0	200R 1% .25W RESISTOR METL FLM	EUROHM MF25	1.000	EA	4					
06		RA240R0	240R 1% .25W RESISTOR METL FLM	EUROHM MF25	1.000	EA	4					
06		RA300R0	300R 1% .25W RESISTOR METL FLM	EUROHM MF25	1.000	EA	4					
06		RA360R0	360R 1% .25W RESISTOR METL FLM	EUROHM MF25	1.000	EA	4					
07		RA510R0	510R 1% .25W RESISTOR METL FLM	EUROHM MF25	1.000	EA	4					
06		RA680R0	680R 1% .25W RESISTOR METL FLM	EUROHM MF25	1.000	EA	4					
07		RA910R0	910R 1% .25W RESISTOR METL FLM	EUROHM MF25	1.000	EA	4					
04		SR10600	1P-23W MBB SW ROT ADJ 6SP DIA	ELMA 03/04 AUNI	1.000	EA	4					

PARENT ITEM NO. PL20236 K

DESCRIPTION EK20236 COMPRESS RECOVERY SW.
ENGR DRAW PL20236 ISS.2
STANDARD BATCH QUANTITY 1.000

QTY 1 ITEM TYPE 1 LOW LEVEL 03
UNIT MEAS EA PLANNER 52

LL CD	SEQ NO.	COMPONENT ITEM NO.	DESCRIPTION	ENGINEERING DRAWING NUMBER	QUANTITY PER	ITEM UM	TYP	OPT NO.	FIRST OP SEQ	LT ADJ	EFFECTIVE DATES FROM	TO
05		CA60471	47U CAPC 16V TANT 3D RAD 20%	ITT TAG & NCI	1.000	EA	4					
07		DD1C002	1N4148 DIODE 75MA 50PIV AXA	TEXAS BAX13-	2.000	EA	4					
06		RA007K5	7K5 1% .25W RESISTOR METL FLM	EUROHM MF25	1.000	EA	4					
06		RA018K0	18K 1% .25W RESISTOR METL FLM	EUROHM MF25	1.000	EA	4					
06		RA024K0	24K 1% .25W RESISTOR METL FLM	EUROHM MF25	1.000	EA	4					
06		RA075K0	75K 1% .25W RESISTOR METL FLM	EUROHM MF25	1.000	EA	4					
06		RA120K0	120K 1% .25W RESISTOR METL FLM	EUROHM MF25	2.000	EA	4					
06		RA150K0	150K 1% .25W RESISTOR METL FLM	EUROHM MF25	1.000	EA	4					
05		RB330K0	330K 2% .50W RESISTOR METALOXI	ELECTRO TR5&NCI	1.000	EA	4					
04		SR14300	2P-6W MBB SW ROT ADJ 4SP DIA	ELMA 01 AUNI	1.000	EA	4					

PARENT ITEM NO. PL20237 K

DESCRIPTION EK20237 LIMIT RECOVERY SWITCH.
ENGR DRAW PL20237 ISS.3
STANDARD BATCH QUANTITY 1.000

QTY 1 ITEM TYPE 1 LOW LEVEL 03
UNIT MEAS EA PLANNER 52

LL CD	SEQ NO.	COMPONENT ITEM NO.	DESCRIPTION	ENGINEERING DRAWING NUMBER	QUANTITY PER	ITEM UM	TYP	OPT NO.	FIRST OP SEQ	LT ADJ	EFFECTIVE DATES FROM	TO
05		CA60471	470 CAPC 16V TANT 3D RAD 20%	ITT TAG & NCI	1.000	EA	4					
07		DD10002	1N4148 DIODE 75MA 50PIV AXA	TEXAS BAX13-	2.000	EA	4					
07		RA006K8	6K8 1% .25W RESISTOR METL FLM	EUROHM MF25	1.000	EA	4					
06		RA007K5	7K5 1% .25W RESISTOR METL FLM	EUROHM MF25	1.000	EA	4					
06		RA008K2	8K2 1% .25W RESISTOR METL FLM	EUROHM MF25	1.000	EA	4					
06		RA015K0	15K 1% .25W RESISTOR METL FLM	EUROHM MF25	1.000	EA	4					
06		RA018K0	18K 1% .25W RESISTOR METL FLM	EUROHM MF25	1.000	EA	4					
07		RA100K0	100K 1% .25W RESISTOR METL FLM	EUROHM MF25	1.000	EA	4					
06		RA120K0	120K 1% .25W RESISTOR METL FLM	EUROHM MF25	2.000	EA	4					
04		SR14300	2P-6W MBB SW ROT ADJ 4SP DIA	ELMA 01 AUNI	1.000	EA	4					

PARENT ITEM NO. PL20238 K

DESCRIPTION EK20238 LIMIT LEVEL SWITCH.
ENGR DRAW PL20238 ISS.3
STANDARD BATCH QUANTITY 1.000

QTY 1 ITEM TYPE 1 LOW LEVEL 03
UNIT MEAS EA PLANNER 52

LL CD	SEQ NO.	COMPONENT ITEM NO.	DESCRIPTION	ENGINEERING DRAWING NUMBER	QUANTITY PER	ITEM UM	TYP	OPT NO.	FIRST OP SEQ	LT ADJ	EFFECTIVE DATES FROM	TO
06		RA051R0	51R 1% .25W RESISTOR METL FLM	EUROHM MF25	1.000	EA	4					
06		RA056R0	56R 1% .25W RESISTOR METL FLM	EUROHM MF25	1.000	EA	4					
05		RA062R0	62R 1% .25W RESISTOR METL FLM	EUROHM MF25	1.000	EA	4					
07		RA068R0	68R 1% .25W RESISTOR METL FLM	EUROHM MF25	3.000	EA	4					
06		RA075R0	75R 1% .25W RESISTOR METL FLM	EUROHM MF25	1.000	EA	4					
06		RA082R0	82R 1% .25W RESISTOR METL FLM	EUROHM MF25	1.000	EA	4					
06		RA091R0	91R 1% .25W RESISTOR METL FLM	EUROHM MF25	3.000	EA	4					
07		RA100R0	100R 1% .25W RESISTOR METL FLM	EUROHM MF25	1.000	EA	4					
06		RA110R0	110R 1% .25W RESISTOR METL FLM	EUROHM MF25	2.000	EA	4					
06		RA120R0	120R 1% .25W RESISTOR METL FLM	EUROHM MF25	1.000	EA	4					
06		RA130R0	130R 1% .25W RESISTOR METL FLM	EUROHM MF25	2.000	EA	4					
07		RA150R0	150R 1% .25W RESISTOR METL FLM	EUROHM MF25	2.000	EA	4					
06		RA160R0	160R 1% .25W RESISTOR METL FLM	EUROHM MF25	1.000	EA	4					
06		RA180R0	180R 1% .25W RESISTOR METL FLM	EUROHM MF25	2.000	EA	4					
04		SR10600	1P-23W MSB SW ROT ADJ 6SP DIA	ELMA 03/04 AUNI	1.000	EA	4					

POSn	FUNCn
1	1·5 : 1
2	2 : 1
3	3 : 1
4	4 : 1
5	6 : 1
WIPER	

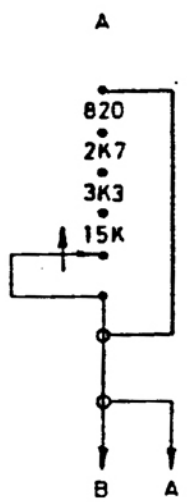

NOTES -

1 THIS IS AN ELMA 2P 6WAY SWITCH STOPPED DOWN TO 5 POSITIONS

2 POSITION 1 IS FULLY COUNTER CLOCKWISE VIEWED FROM OPERATING OR PANEL END OF SWITCH.

3 FUNCTION IS LEGEND PRINTED ON PANEL

4 1 • 820 • 2 DENOTES 1 820 2

COMPRESS RATIO SWITCH Drg. No. EK 20233

POSn	FUNCn
1	0dB
2	
3	
4	
5	
6	+10 dB
7	
8	
9	
10	
11	+20dB
WIPER	

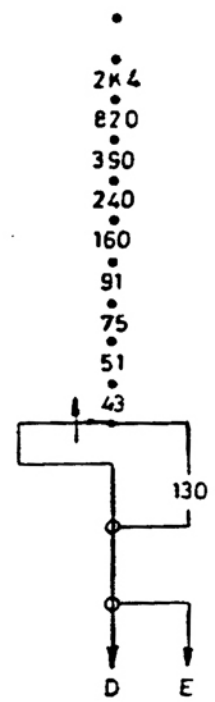

NOTES-

1 THIS IS AN ELMA 1P 23 WAY SWITCH STOPPED DOWN TO 11 POSITIONS SPARE WAYS MAY BE USED AS ANCHOR POINTS

2 POSITION 1 IS FULLY COUNTER CLOCKWISE VIEWED FROM OPERATING OR PANEL END OF SWITCH

3 FUNCTION IS LEGEND PRINTED ON PANEL

4 2 • 2K4 • 3 DENOTES 2 2K4 3

GAIN MAKE UP SWITCH Drg. No. EK 20234

POSn	FUNCn
1	-20dBm
2	
3	
4	
5	
6	-10dBm
7	
8	
9	-4dBm
10	
11	0dBm
12	
13	+4dBm
14	
15	
16	+10dBm
WIPER	

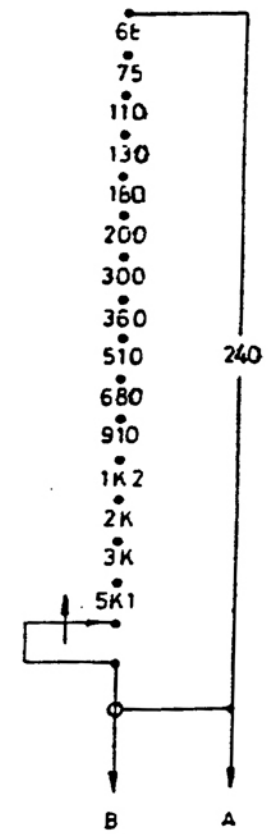

NOTES.-

1 THIS IS AN ELMA 1P 23WAY SWITCH, STOPPED DOWN TO 16 POSNs

2 POSITION 1 IS FULLY COUNTER CLOCKWISE VIEWED FROM OPERATING OR PANEL END OF SWITCH

3 FUNCTION IS LEGEND PRINTED ON PANEL

4 1 • 68 • 2 DENOTES 1 68 2

5 SPARE POSITIONS MAY BE USED AS ANCHOR POINTS

COMPRESS THRESHOLD SWITCH Drg. No EK 20235

POSn	FUNCn
1	100 mS
2	400 mS
3	800 mS
4	1·5 S
5	A1 100mS/2S
6	A2 50mS/5S
WIPER	

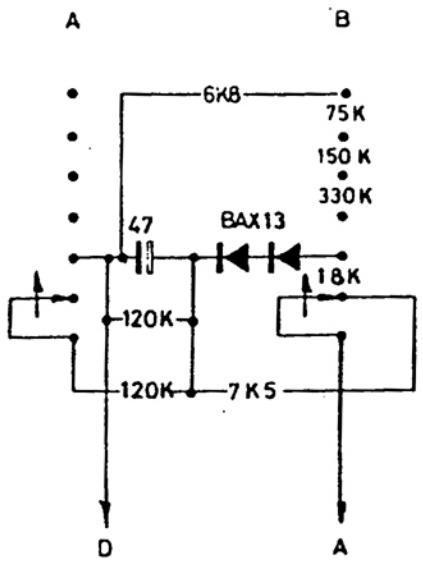

NOTES.-

1. THIS IS AN ELMA 2P 6 WAY SWITCH.
2. POSITION 1 IS FULLY COUNTER CLOCKWISE VIEWED FROM PANEL OR OPERATING END OF SWITCH.
3. FUNCTION IS LEGEND PRINTED ON PANEL.
4. 1 2 75K DENOTES 1 75K 2

COMPRESS RECOVERY SWITCH Drg. No. EK 20236

POSn	FUNCn
1	50mS
2	100mS
3	200mS
4	800mS
5	A1 100mS/2S
6	A2 50mS/5S
WIPER	

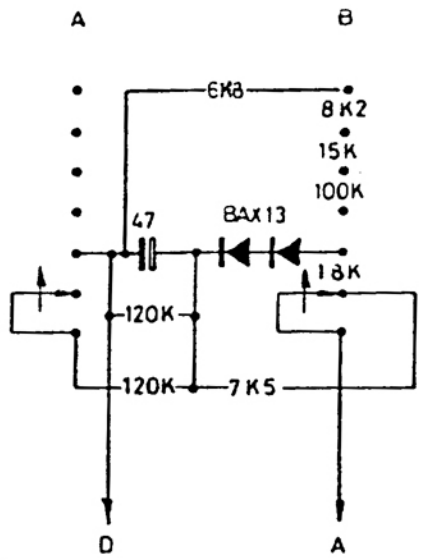

NOTES.-

1. THIS IS AN ELMA 2P 6 WAY SWITCH.
2. POSITION 1 IS FULLY COUNTER CLOCKWISE VIEWED FROM PANEL OR OPERATING END OF SWITCH.
3. FUNCTION IS LEGEND PRINTED ON PANEL
4. 1 2 8K2 DENOTES 1 8K2 2

LIMIT RECOVERY SWITCH Drg. No. EK 20237

POSn	FUNCn
1	+4 dBm
2	
3	
4	
5	
6	
7	
8	
9	+8 dBm
10	
11	
12	
13	
14	
15	
16	
17	+12 dBm
18	
19	
20	
21	
22	
23	+15 dBm
WIPER	

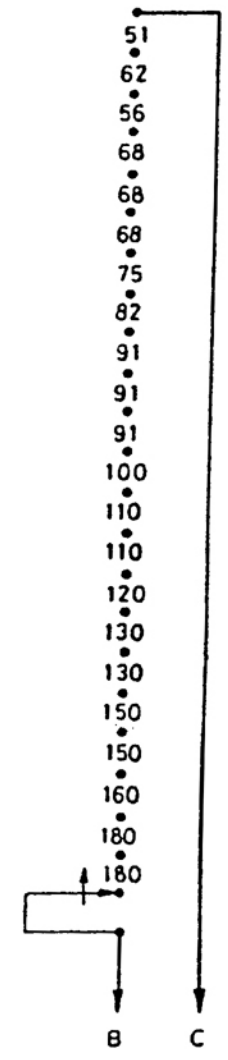

NOTES.-

1. THIS IS AN ELMA 1P 23 WAY SWITCH.
2. POSITION 1 IS FULLY COUNTER CLOCKWISE VIEWED FROM PANEL OR OPERATING END OF SWITCH.
3. FUNCTION IS LEGEND PRINTED ON PANEL.
4. 1 2 51 DENOTES 1 51 2

LIMIT LEVEL SWITCH Drg. No. EK 20238

3 Limiter/Compressor Board (11475)

The main audio path through each channel is via T2, D14 to D17, TR16 and TR17, TR3 and TR4, T1, T3 and the bypass switch. The remaining components on the board and some external components form the sidechain.

The incoming audio signal is applied to the transformer T2 which feeds a balanced attenuator pad formed by R47 to R49 and R11. The active attenuator of the limiter/compressor is formed by a balanced diode bridge D14 to D17. A DC control voltage, derived by the limiter or compressor sidechain sections, is used to forward bias the diodes in the bridge and thereby alter the effective value of the attenuator resistance. The attenuator pad reduces the input signal level such that the signal remains in a linear region of the diode characteristic.

A high impedance buffer is formed by transistors TR16, TR3, TR17 and TR4, eliminating loading effects by the transformer T1 on the diode bridge. The signal from T2 is fed to the power amplifier 10640 via the gain preset control RV1. From the power amplifier the signal is suppliedd to the output transformer T3 and then via connector pins P3 10 and P3 9 to the output **bypass/in** switch.

Transistors TR2, TR5, TR5, TR8 and TR9 form the active components of the compressor sidechain and TR6, TR7 and TR10 to TR13 the active components of the limiter sidechain. The combination of TR9, TR13 and TR1 gives a low output impedance signal equal to the larger of the compressor or limiter sidechain signals. This voltage is attenuated by R36, RV2, R45, R29 and D10 and supplied as the control voltage to the diode bridge.

Limiting

The output of the power amplifier board (10640) is connected via the **limit in** (Plug 3, pin 1; P3 1), the **threshold dBu** control (RV4) (P1 4 and P1 5) and capacitor C11 to a phase dividing amplifier pair TR6 and TR10, the outputs of which are rectified by diodes D7 and D8. Transistors TR11 and TR7 form a threshold detector and DC amplifier to feed TR12 via D9. The threshold reference is derived by D13 and R22. Emitter follower TR12 charges a storage capacitor C14 through R28 which determines the attack time constant of the limiter. R30 is connected in parallel with R28 when the **attack** switch is in the **fast** position.

The recovery time is set by the resistance of the **recovery ms** control (P2 1 and P1 7/8). P1 7/8 is connected to the junction of D11 and R8. D11 provides a temperature compensated reference voltage for use in the recovery time circuits of the limiter/compressor sidechains. Transistors TR13 and TR1 form a high input impedance buffer stage following the time constant circuit. To set the exact limit threshold of the sidechain circuit, the **threshold** control is set to the +8dBu position and an input level of +20dBu is applied to the module. The preset

potentiometer RV4 is adjusted (altering the gain of the amplifier stages TR6 and TR10) to obtain an output level of +8dBu.

Compression

The input signal to the compressor sidechain is taken from the wiper of RV1 and is connected via the **compress in** switch and C12 to the base of TR2. The gain of the amplifier formed by TR2 and TR15 is changed by the value of resistance selected on the **threshold dbu** control. TR5 is used as the threshold detector, taking its reference from D2 and R50, and provides current drive to the series network of D12, D3 to D6 and R26 and the compress **ratio** control. These components give a voltage of the correct characteristic necessary for the selected compression ratio. This voltage turns on TR8 which charges C13 via R31. The time constant determined by the combination of R31 and C13 sets the fixed attack time constant of the compressor. The resistance selected by the compress **recovery (ms)** control and the value of C13 determines the recovery time constant of the circuit. The voltage on C13 is fed to the high impedance buffer formed by TR9 and TR1. The emitter load of TR9 is formed by R36, RV2, R45, R29 and D10 and produces a law correction characteristic necessary to properly drive the gain control diode bridge.

The voltage on the emitters of TR9 and TR13 is connected to the meter preset RV3 and to the gain reduction meter itself via D18 and R35. The wiper of RV3 is buffered by emitter follower TR14 and the output signal fed to the gain reduction meter via R32. RV3 is adjusted to calibrate the meter at known levels of gain reduction. D18 and R35 feed a small amount of the control voltage directly to the meter to improve the accuracy at small amounts of gain reduction.

Gain Make-Up

If a compressor threshold point below line level is selected, it may be necessary to add gain after compression to restore mean programme level. The function is obtained by use of the **gain** make-up control which alters the feedback in amplifier 10640 when the **compress in** switch is closed.

Variant Information

No variants

Associated Drawings

Parts List: PL11475
Component Layout: EW11475
Circuit Diagram: EX11475

PARENT ITEM NO. PL11475 K

DESCRIPTION LIMITER COMPRESSOR PCB
ENGR DRAW PL11475 ISS.1
STANDARD BATCH QUANTITY 1.000

QTY 1 ITEM TYPE 1 LOW LEVEL 01
UNIT MEAS EA PLANNER 53

LL CD	SEQ NO.	COMPONENT ITEM NO.	DESCRIPTION	ENGINEERING DRAWING NUMBER	QUANTITY PER	ITEM UM TYP	OPT NO.	FIRST OP SEQ	LT ADJ	EFFECTIVE DATES FROM	TO
07		*	MANUFACTURING INFO./COMMENTS	FOR INFO. ONLY	.000	EA 4					
						EX11475					
08		*C	CHANGE NOTE HISTORY		.000	EA 4					
						ISS.A CH 23/5/89 ISS.B 23/6/89					
						ISS.C 25/7/89 ISS.D 31416 10/8/89					
						ISS.1 21017 16/5/90					
07		CA11001	100P CAPC 100V CER PLT RAD 2%	PHILIP 68334101	4.000	EA 4					
						C 19,20,21,22.					
06		CA20009	1N5 CAPC 100V RET PE RAD 2.5%	THOMSON IRE607	1.000	EA 4					
						C 23.					
06		CA60100	10U CAPC 25V TANT BD RAD 20%	AVX TAP10M255	2.000	EA 4					
						C 13,14.					
06		CA60331	33U CAPC 16V TUB ALECT RAD 20%	MUL 035-55339	6.000	EA 4					
						C 7,8,9,10,11,12.					
06		CA61008	100U 35V ALECT CAP TUB RAD 20%	PANA ECEAIVFS10	4.000	EA 4					
						C 3,4,5,6.					
05		CA64704	470U CAPC TUB ALECT RAD 20%	MUL 035 55471	2.000	EA 4					
						C 16,18.					
06		CA65001	470U CAPC 6V3 TUB ALECT RAD	SPRAGUE 509DSA4	2.000	EA 4					
						C 1,2.					
06		CA65004	470U CAPC 25V TUB ALECT RAD 20	PANASONIC ECEA1	2.000	EA 4					
						C 15,17.					
07		CN10209	10-PLG PCB 0.1 PITCH SING ROW	MOLEX 6373 TY-	3.000	EA 4					
						P 1,2,3.					
06		CN20002	1-SKT TO TK 1MM PLG 1/16 PCB	CAMBION TO NCI	5.000	EA 4					
						P 4-8.					
07		DD10002	1N4148 DIODE 75MA 50PIV AXA	TEXAS BAX13-	11.000	EA 4					
						D 1,2,3,4,5,6,7,8,9,10,11.					
05		DD12001	BAT42 SCHOTTKY DIODE 30V/150MA	STM BAT42	1.000	EA 4					
						D18.					
07		DD16000	2V7 ZENER 400MW 5% AXA LEADS	PHILLIPS BZX79C	2.000	EA 4					
						D 12,13.					
02		EV11475	PCB		1.000	EA 4					
07		FA12702	NO4 1/4 PAN POZI HD SCW SELFT	ST BRI ZN&PASS	4.000	EA 4					
						FOR T1 & T2.					
06		FM10503	M2X12 CH SLOT HD SCW STEEL	BRI ZN&PASS	1.000	EA 4					
						FOR PL10640.					
06		FM11621	M3X6 PAN POZI HD SCW STEEL	BRI ZN&PASS	4.000	EA 4					
						FOR T3.					
07		FM21010	M2 WASHER STEEL BRI ZN &PASS	BRI ZN&PASS	1.000	EA 4					
						FOR PL10640					
07		FM21030	M3 WASHER STEEL BRI ZN &PASS	BRI ZN&PASS	4.000	EA 4					
						FOR T3.					
04		MZ22032	SELECTED 1N4148 DIODE LOW VF	SELECT TO DRWNG	4.000	EA 2					
						D14-17.					
07		PT13210	5K 10% PCB PSET POT TOP MULT	BOURNS 3296W-1-	2.000	EA 4					
						RV1,2.					
06		PT15034	10K 20% PCB PSET POT TOP MULT	BOURNS 3296W-1-	2.000	EA 4					

PARENT ITEM NO. PL11475 K
DESCRIPTION LIMITER COMPRESSOR PCB
ENGR DRAW PL11475 ISS.1
STANDARD BATCH QUANTITY 1.000
QTY 1 ITEM TYPE 1 LOW LEVEL 01
UNIT MEAS EA PLANNER 53

LL SEQ CD NO.	COMPONENT ITEM NO.	DESCRIPTION	ENGINEERING DRAWING NUMBER	QUANTITY PER	ITEM UM TYP	OPT NO.	FIRST OP SEQ	LT ADJ	EFFECTIVE DATES FROM	TO
					RV3,4.					
02	PT19021	50K 10% PCB PSET POT TOP ADJ	BOURNS 3296W-1-	1.000	EA	4				
					RV 5.					
07	RA001K0	1K0 1% .25W RESISTOR METL FLM	EUROHM MF25	1.000	EA	4				
					R 36.					
06	RA001K1	1K1 1% .25W RESISTOR METL FLM	EUROHM MF25	3.000	EA	4				
					R 37,38,39.					
06	RA001K2	1K2 1% .25W RESISTOR METL FLM	EUROHM MF25	1.000	EA	4				
					R 41.					
06	RA001K3	1K3 1% .25W RESISTOR METL FLM	EUROHM MF25	1.000	EA	4				
					R 40.					
07	RA002K2	2K2 1% .25W RESISTOR METL FLM	EUROHM MF25	1.000	EA	4				
					R 47.					
07	RA003K3	3K3 1% .25W RESISTOR METL FLM	EUROHM MF25	3.000	EA	4				
					R 28,29,30.					
07	RA004K3	4K3 1% .25W RESISTOR METL FLM	EUROHM MF25	1.000	EA	4				
					R 53.					
07	RA004K7	4K7 1% .25W RESISTOR METL FLM	EUROHM MF25	4.000	EA	4				
					R 14,15,16,17.					
07	RA005K6	5K6 1% .25W RESISTOR METL FLM	EUROHM MF25	2.000	EA	4				
					R 11,12.					
06	RA007K5	7K5 1% .25W RESISTOR METL FLM	EUROHM MF25	3.000	EA	4				
					R 33,34,35.					
07	RA010K0	10K 1% .25W RESISTOR METL FLM	EUROHM MF25	5.000	EA	4				
					R 1,2,3,4,5.					
06	RA011K0	11K 1% .25W RESISTOR METL FLM	EUROHM MF25	3.000	EA	4				
					R 54,55,56.					
07	RA012K0	12K 1% .25W RESISTOR METL FLM	EUROHM MF25	1.000	EA	4				
					R 25.					
06	RA016K0	16K 1% .25W RESISTOR METL FLM	EUROHM MF25	1.000	EA	4				
					R 24.					
06	RA024K0	24K 1% .25W RESISTOR METL FLM	EUROHM MF25	3.000	EA	4				
					R 6,7,8.					
06	RA033K0	33K 1% .25W RESISTOR METL FLM	EUROHM MF25	1.000	EA	4				
					R 13.					
06	RA047K0	47K 1% .25W RESISTOR METL FLM	EUROHM MF25	5.000	EA	4				
					R 48,49,50,51,52.					
07	RA047R0	47R 1% .25W RESISTOR METL FLM	EUROHM MF25	2.000	EA	4				
					R 26,27.					
06	RA062K0	62K 1% .25W RESISTOR METL FLM	EUROHM MF25	1.000	EA	4				
					R 60.					
07	RA100K0	100K 1% .25W RESISTOR METL FLM	EUROHM MF25	1.000	EA	4				
					R 21.					
07	RA100R0	100R 1% .25W RESISTOR METL FLM	EUROHM MF25	1.000	EA	4				
					R 9.					
06	RA120K0	120K 1% .25W RESISTOR METL FLM	EUROHM MF25	3.000	EA	4				
					R 18,19,20					
07	RA150R0	150R 1% .25W RESISTOR METL FLM	EUROHM MF25	2.000	EA	4				

PARENT ITEM NO. PL11475 K
DESCRIPTION LIMITER COMPRESSOR PCB
ENGR DRAW PL11475 ISS.1
STANDARD BATCH QUANTITY 1.000
QTY 1 ITEM TYPE 1 LOW LEVEL 01.
UNIT MEAS EA PLANNER 53

LL CO	SEQ NO.	COMPONENT ITEM NO.	DESCRIPTION	ENGINEERING DRAWING NUMBER	QUANTITY PER	ITEM UM	TYP	OPT NO.	FIRST OP SEQ	LT ADJ	EFFECTIVE DATES FROM	TO
							R	22,23.				
07		RA220K0	220K 1% .25W RESISTOR METL FLM	EUROHM MF25	1.000	EA	4					
							R	46.				
07		RA220R0	220R 1% .25W RESISTOR METL FLM	EUROHM MF25	1.000	EA	4					
							R	45.				
06		RA240R0	240R 1% .25W RESISTOR METL FLM	EUROHM MF25	2.000	EA	4					
							R	10,61.				
05		RA430R0	430R 1% .25W RESISTOR METL FLM	EUROHM MF25	1.000	EA	4					
							R	59.				
06		RA560R0	560R 1% .25W RESISTOR METL FLM	EUROHM MF25	1.000	EA	4					
							R	31.				
06		RA680R0	680R 1% .25W RESISTOR METL FLM	EUROHM MF25	1.000	EA	4					
							R	32.				
06		RA820R0	820R 1% .25W RESISTOR METL FLM	EUROHM MF25	1.000	EA	4					
							R	42.				
06		RB680R0	680R 2% .50W RESISTOR METALOXI	ELECTRO TR5&NCI	1.000	EA	4					
							R	58.				
06		RJ010R0	10R 10% .5W RESISTOR C/CARBON	DUBIL BTT &NCI	2.000	EA	4					
							R	43,44.				
07		RF001M0	1MO 5% .25W RESISTOR CARBFILM	MUL CR25-AB CB&	1.000	EA	4					
							R	57.				
06		SA10200	TO5 TR MTG PAD 4LEAD MAX	JERMYN TO5-001P	1.000	EA	4					
06		SA10400	TO18 TO5 TR MTG PAD 3LEAD MAX	JERMYN EPX 002P	15.000	EA	4					
07		TF10015	MIC I/P TXF MU MET CAN PCB MTD	TO NEVE EM20015	1.000	EA	4					
							T	1.				
06		TF10016	LINE I/P TXF MU-MET CAN PCBMTD	TO NEVE EM20031	1.000	EA	4					
							T	2.				
04		TF12009	O/P TXF LO1173/1 TO/600R PCBMT	MARINAIR T1684	1.000	EA	4					
							T	3.				
06		TR12402	BC214 GRP C PNP TO92 SILIC TR	NAT BC214-KC	6.000	EA	4					
							TR	2,3,4,5,6,7.				
06		TR12601	MJE371 PNP TO126 SILIC TR	MOT MJE371	1.000	EA	4					
							TR	1.				
06		TR16201	BC441 GRP6 NPN TO5 SILICON TR	SGS BC441-6	1.000	EA	4					
							TR	15.				
06		TR16401	BC184 GRP C NPN TO92 SILICO TR	NAT BC184C	7.000	EA	4					
							TR	8,9,10,11,12,13,14				
06		TR32410	J109 N CHAN FET TR	SILICONIX &NCI	2.000	EA	4					
							TR	16,17.				
07		WA19000	CERAMIC SPACER 3LX3.20DX1ID	STEATITE N01 TY	4.000	EA	4					

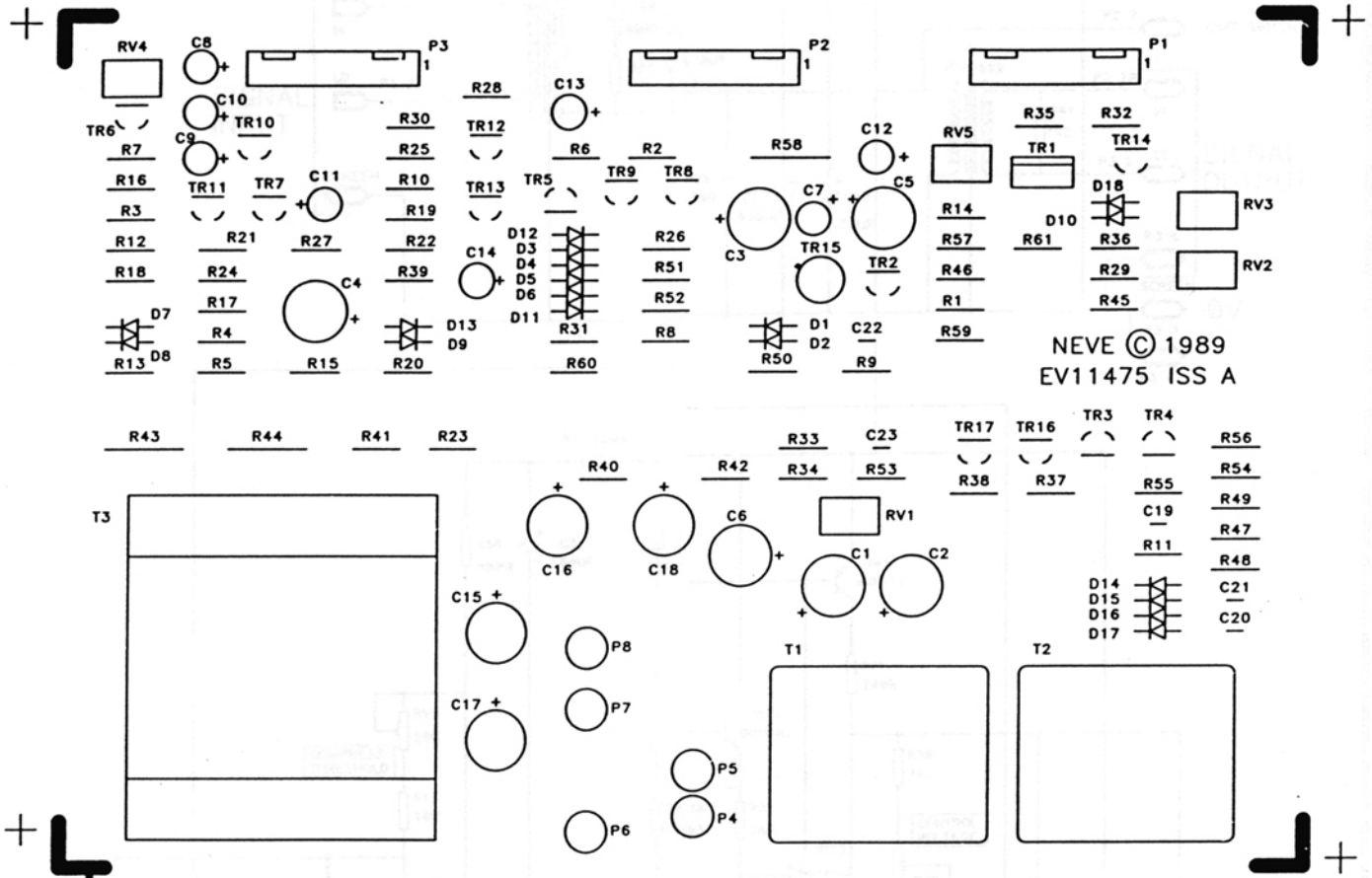
RV4
C8
P3
P2
P1
C10
TR6
TR10
C9
R28
C13
R30
TR12
R6
R2
R58
C12
RV5
R35
R32
TR14
TR1
R7
R25
TR9
TR8
R16
TR11
TR7
C11
R10
TR13
TR5
C7
C5
D18
RV3
R3
R19
R14
D10
R12
R21
R27
R22
D12
D3
D4
D5
D6
D11
R26
C3
TR15
R57
R61
R36
R18
R24
R39
C14
R51
TR2
R46
R29
RV2
C4
R17
R52
R1
R45
D7
R4
D13
D9
R31
R8
D1
D2
C22
R59
R13
D8
R5
R15
R20
R60
R50
R9
NEVE © 1989
EV11475 ISS A
R43
R44
R41
R23
R33
C23
TR17
TR16
TR3
TR4
R56
R40
R42
R34
R53
R38
R37
R55
R54
T3
C16
C18
C6
RV1
C19
R49
R11
C1
C2
R47
R48
D14
D15
D16
D17
C21
C20
C15
P8
T1
T2
C17
P7
P5
P4
P6
NEVE EW11475 ISS A

DRAWING No. EX11475 SHT 1 of 1

SIGNAL PATH

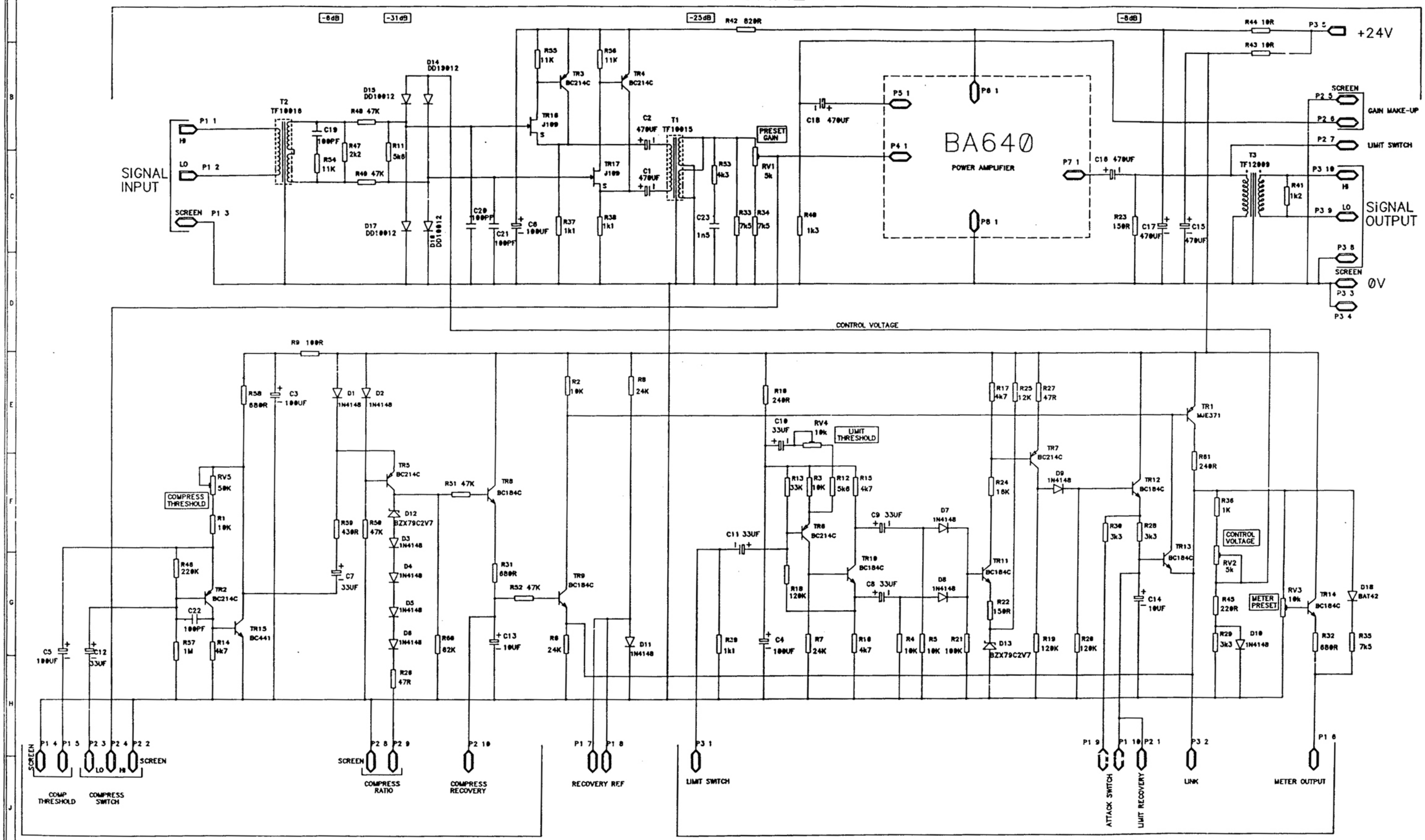

COMPRESSOR SIDECHAIN

LIMITER SIDECHAIN

	B	A	Issue	Drn.	CRH	TITLE COMPRESSOR	USED ON	PN33609
	4/7/89	8/12/88	Date	Traced		LIMITER PCB	Drg. No.	EX11475
	N/A		C.N. No.	Checked		CIRCUIT DIAGRAM	SHT.	1 of 1
			Checked	Neve Electronics International Ltd 1988©				A1

4 Power Amplifier (10640)

Introduction

This board is a line amplifier with a low impedance output, suitable for use as a distribution amplifier. It is designed as a plug-in unit to be incorporated in a larger motherboard. The gain of the circuit is determined by the value of an external gain boost resistor.

Circuit Description

The circuit is driven by a nominal +24V supply; decoupling and smoothing components will normally be mounted on the motherboard.

Inverting and non-inverting inputs are both accessible on IC1 via board input pins 1 and 2; a gain boost resistor can be fitted between the PCB inverting input (pin 2) and 0V.

IC1 is followed by a low impedance output stage (TR1, TR2) which also incorporates overlaod protection.

Specification

Quiescent Conditions: With a gain boost resistor of 1k6 ohm (equivalent to +20dB gain) and the output terminated in 620 ohm, the static current should be between 20mA and 30mA; the standing output voltage (pin 6) should be +12V ±1V.

Gain: With 1kHz sine wave input at -10dBu, the output level should be +10dBu ±0.5dB.

Maximum Output: With an output load of 50 ohm and the 1kHz input level increased until the output signal is just clipping, the output level should be greater than +18dBu.

Distortion: At 1kHz input adjusted to give 17dB output into 50 ohm, the distortion should be as follows:

100Hz	less than 0.008%
1kHz	less than 0.004%
10kHz	less than 0.02%

Noise: With the input short-circuited, the output noise level must be less than -96dBu over the bandwidth 20Hz to 20kHz.

Variant Information

No variants exist

Associated Drawings

Parts List: PL10640
Component Layout: EW10640
Circuit Diagram: EX10640

PARENT ITEM NO. PL10640 K

DESCRIPTION BA640 POWER AMPLIFIER
ENGR DRAW PL10640 ISS.A
STANDARD BATCH QUANTITY 1.000

QTY 1 ITEM TYPE 1 LOW LEVEL 04
UNIT MEAS EA PLANNER 53

LL CD	SEQ NO.	COMPONENT ITEM NO.	DESCRIPTION	ENGINEERING DRAWING NUMBER	QUANTITY PER	ITEM UM	TYP	OPT NO.	FIRST OP SEQ	LT ADJ	EFFECTIVE DATES FROM	TO
07		CA10101	10P CAPC CER PLT 100V RAD 2%	PHILIP 68310109	1.000	EA	4					
06		CA10220	22P CAPC 63V TUB POLY AXA 10%	SUFLEX HS &NCI	1.000	EA	4					
06		CA20223	22N CAPC 63V CER PLT RAD+80%	MUL 629 &NCI	1.000	EA	4					
06		CA60100	10U CAPC 25V TANT BD RAD 20%	AVX TAP10M255	1.000	EA	4					
05		CA60224	22U CAPC 15V TANT BD GEN P 20%	ITT TAP & NCI	1.000	EA	4					
05		CA60471	47U CAPC 16V TANT BD RAD 20%	ITT TAG & NCI	1.000	EA	4					
07		CN10002	1-PLG PCB MTD 1D 4 1/16 BD	CAMBION TO NCI	5.000	EA	4					
06		DD10005	1N4153 DIODE SELECTED VF/IF	TEXAS IN4153 &	4.000	EA	4					
05		EV10640	PRINTED CIRCUIT BOARD		1.000	EA	4					
06		FA16600	1/8 ID 1/2 OD MICA WASHER	JERMYN A26-3024	2.000	EA	4					
05		FM10502	M2X8 CH SLOT HD SCW STEEL	BRI ZN&PASS	1.000	EA	4					
06		FM11700	M3X12 CH SLOT HD NYLN SCW	PLASTIC SCREW &	2.000	EA	4					
07		IC20007	NE5534 OPAMP BP WS TDA1034 B	SIGNET NE5534N	1.000	EA	4					
05		MG20548	B340 HEAT SINK		1.000	EA	4					
06		MG21150	MTG BUSH 12.5X3/16 BA440		1.000	EA	4					
07		RA001K0	1K0 1% .25W RESISTOR METL FLM	EUROHM MF25	1.000	EA	4					
06		RA003K9	3K9 1% .25W RESISTOR METL FLM	EUROHM MF25	1.000	EA	4					
06		RA015K0	15K 1% .25W RESISTOR METL FLM	EUROHM MF25	1.000	EA	4					
06		RA047K0	47K 1% .25W RESISTOR METL FLM	EUROHM MF25	3.000	EA	4					
05		RF003R3	3R3 5% .33W RESISTOR CARBFILM	MUL CR25-A8 CB&	2.000	EA	4					
06		SA10200	TO5 TR MTG PAD 4LEAD MAX	JERMYN TO5-001P	2.000	EA	4					
06		SA14200	TO5 HEATSINK TOP MTD 12DEG/W	JERMYN J25-1104	2.000	EA	4					
06		TR12201	BC461 GP6 PNP TO5 SILICON TR	SGS BC461-6	1.000	EA	4					
05		TR16201	BC441 GRP6 NPN TO5 SILICON TR	SGS BC441-6	1.000	EA	4					

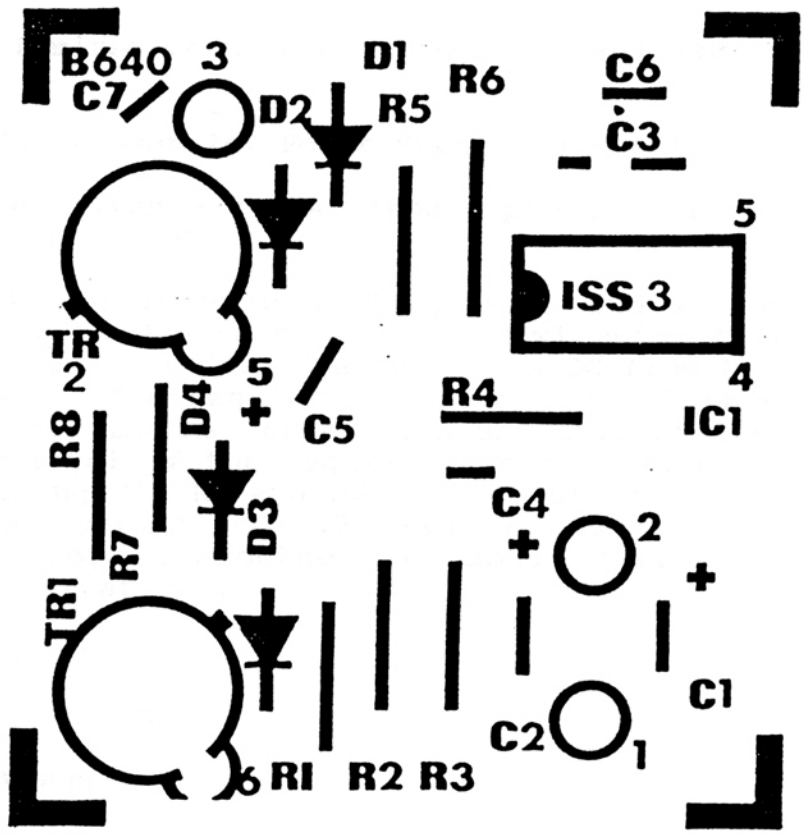

10640 Power Amplifier Component Layout

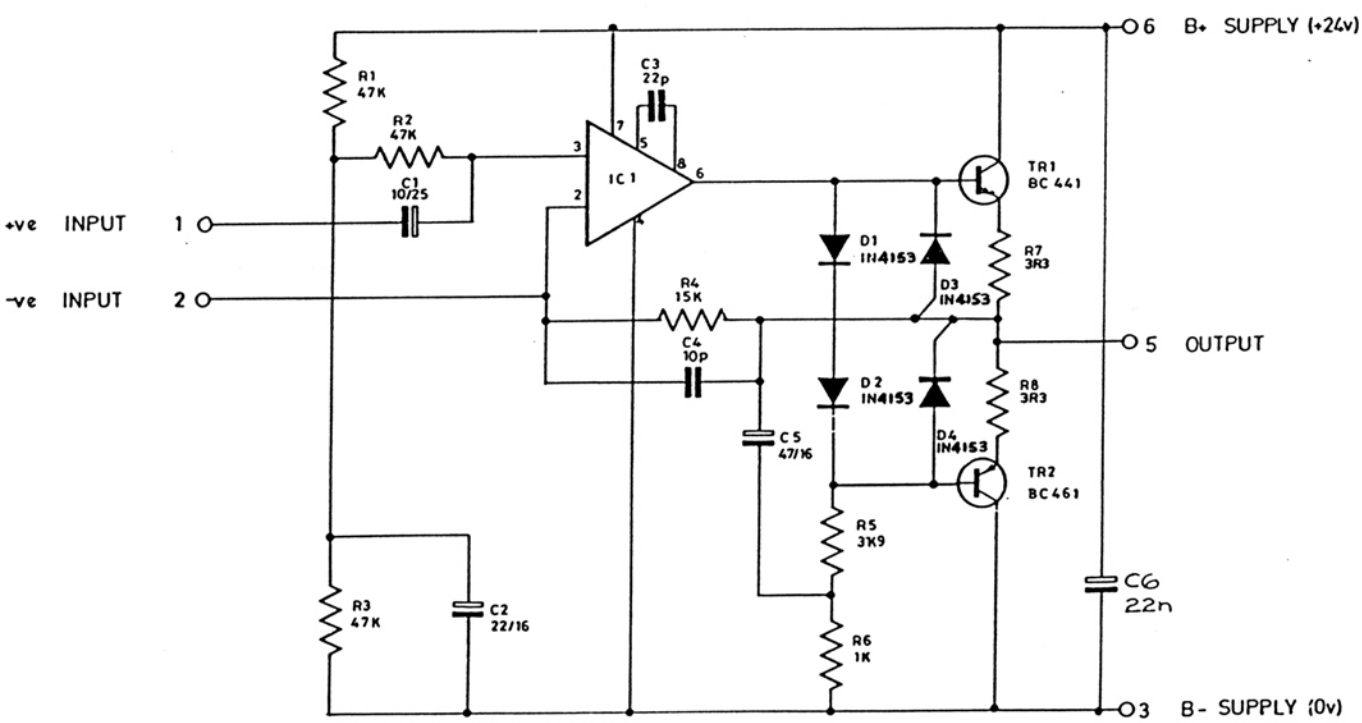

NOTE:- 1. ALL RESISTORS ¼W 5% M.O.
2. C1 IS A LOW LEAKAGE TANTALUM CAPACITOR.
3. TR1 & TR2 ARE MOUNTED TO HEATSINK

10640 Power Amplifier Circuit Diagram

5 Limiter/Compressor 24V Power Supply Unit (11606)

This board, given a 24V AC input, provides a regulated +24V DC supply ±0.1V at 200mA.

The 24V AC input on plug 1, pins 1 and 2, is full-wave rectified by the bridge rectifier D1. Switching transients are suppressed by capacitor C5. The rectified DC from D1 is smoothed by capacitor C2. The regulator IC1 is a monolithic regulator which incorporates thermal protection and current limiting. The output voltage level of the regulator is defined by the resistor network comprising R1, R2 and RV1. A constant voltage of 1.25V is developed across R2 and RV1; RV1 is used to fine tune the output. Capacitor C4 smoothes any small output fluctuations caused by load variations.

Variant Information

No variants exist.

Associated Drawings

Parts List: PL11606
Component Layout: EW11606
Circuit Diagram: EX11606

PARENT ITEM NO. PL11606 K

DESCRIPTION LIMITER COMPRESSOR PSU PCB
ENGR DRAW PL11606 ISS.A
STANDARD BATCH QUANTITY 1.000

QTY 1 ITEM TYPE 1 LOW LEVEL 01
UNIT MEAS EA PLANNER 53

LL CO	SEQ NO.	COMPONENT ITEM NO.	DESCRIPTION	ENGINEERING DRAWING NUMBER	QUANTITY PER	ITEM UM	TYP	OPT NO.	FIRST OP SEQ	LT ADJ	EFFECTIVE DATES FROM	TO
07		*	MANUFACTURING INFO./COMMENTS	FOR INFO. ONLY	.000	EA	4					
08		*C	CHANGE NOTE HISTORY		.000	EA	4					
						ISS.A ST 2/9/89						
07		CA21006	100N CAPC 63V RET POLS RAD 20%	WIMA MKS2-100N-	1.000	EA	4					
						C4.						
05		CA24704	470N CAPC 63V RET POLS RAD 10%	MFD & NCI	1.000	EA	4					
						C5.						
06		CA60225	22U CAPC 50V TUB ALECT RAD 50%	ITT EN42 35 NCI	2.000	EA	4					
						C2,3.						
02		CA71008	1000U CAPC 50V TUB ALECT AX 20	PANASONIC	1.000	EA	4					
						C1.						
05		CN10085	4-PLG FXD PCB MNTNG 0.1 P ST	MOLEX 22-27-204	3.000	EA	4					
						P1,2,3.						
05		DD10605	WOR BRIDGE 1A 200V RRM 4-LEAD	GIM W02	1.000	EA	4					
						D1.						
02		EV11606	PCB		1.000	EA	4					
06		FM11620	M3X5 PAN POZI HD SCW STEEL	BRI ZN&PASS	1.000	EA	4					
						FOR FIXING IC TO HEATSINK.						
07		FM20030	M3 NUT PRESSED STEEL ZN&PASS	BRI ZN&PASS	1.000	EA	4					
						FOR FIXING IC TO HEATSINK.						
07		FM21030	M3 WASHER STEEL BRI ZN &PASS	BRI ZN&PASS	1.000	EA	4					
						FOR FIXING IC TO HEATSINK.						
02		IC20620	LM317 VARI VOLTREG 1.5A TO220	NAT SEMI LM317T	1.000	EA	4					
						IC1.						
05		PT10601	200R 10% PCB PSET POT TOP MULT	BOURNS 3296W-1-	1.000	EA	4					
						RV1.						
07		RA004K7	4K7 1% .25W RESISTOR METL FLM	EUROHM MF25	1.000	EA	4					
						R2						
07		RA270R0	270R 1% .25W RESISTOR METL FLM	EUROHM MF25	1.000	EA	4					
						R1.						
06		SA14705	TO-220 HEATSINK RS 401-863	ALTERNATI NCI--	1.000	EA	4					

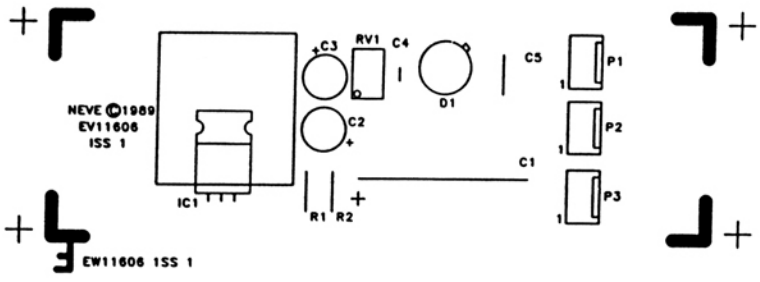

11606 Limiter Compressor 24V Power Supply Unit Component Layout

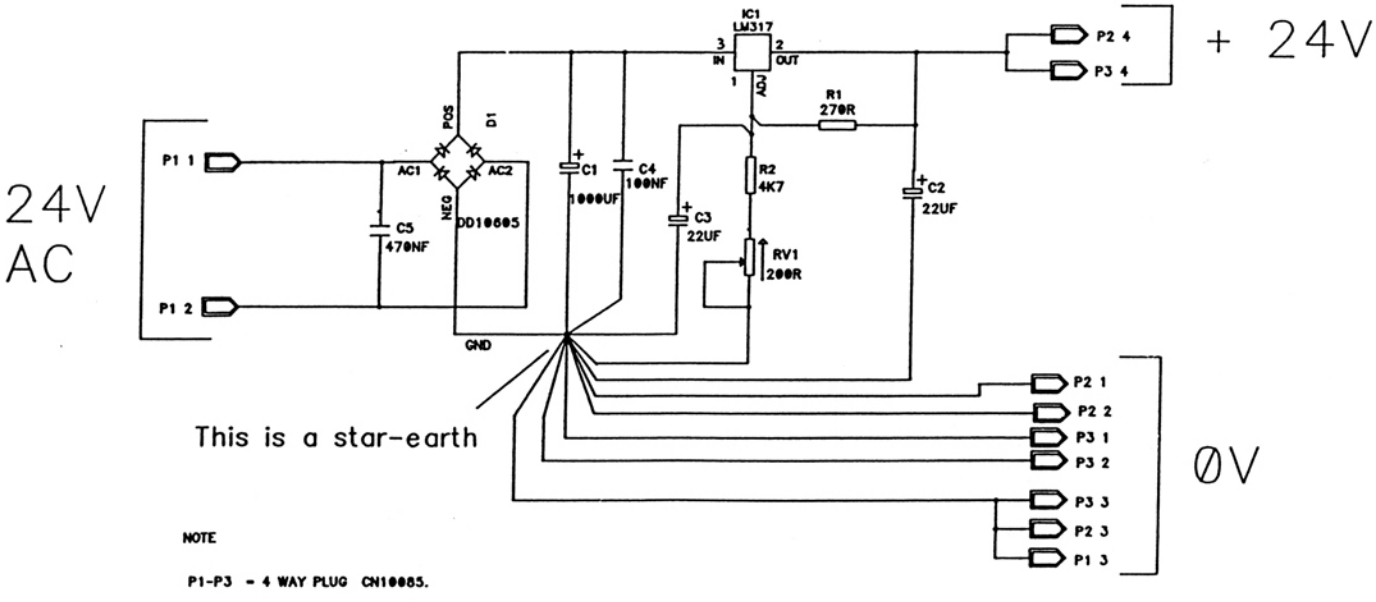

11606 Limiter Compressor 24V Power Supply Unit Circuit Diagram