C-37A MICROPHONE

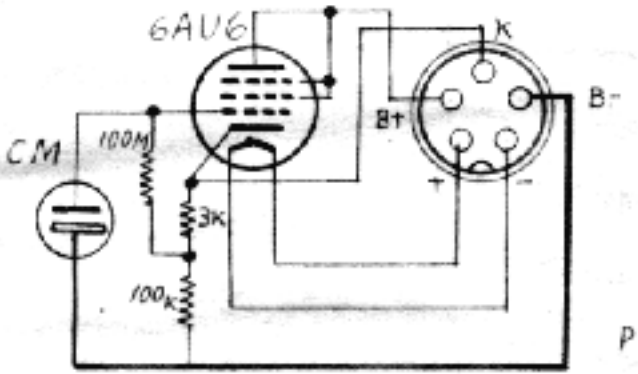

CP-2 POWER SUPPLY

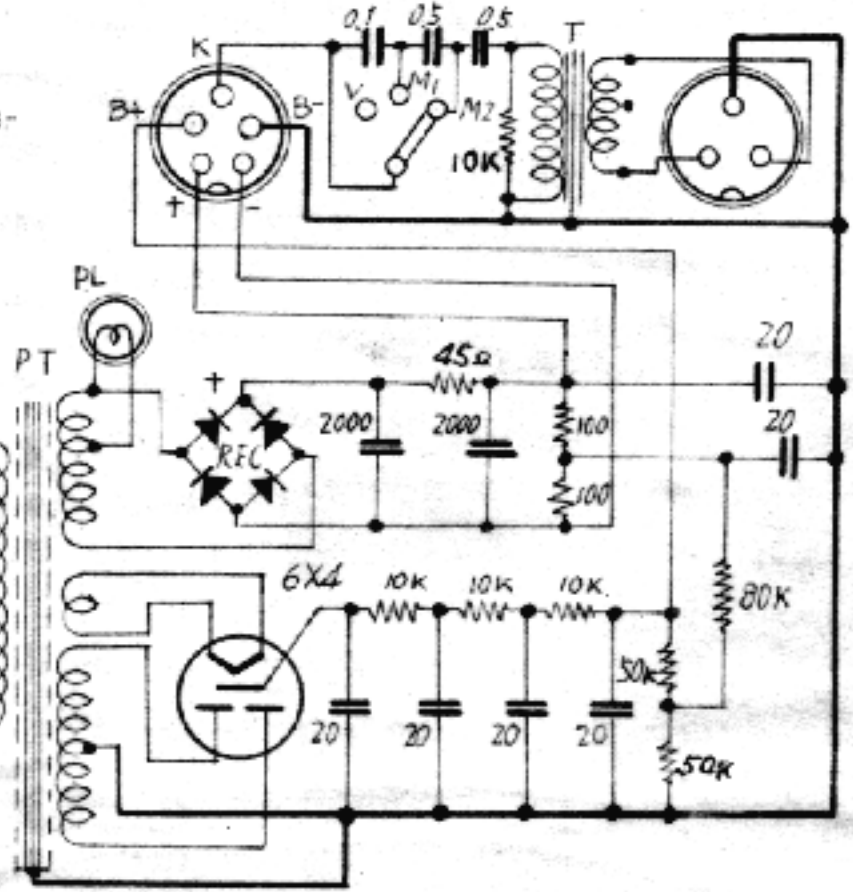

SONY CORPORATION