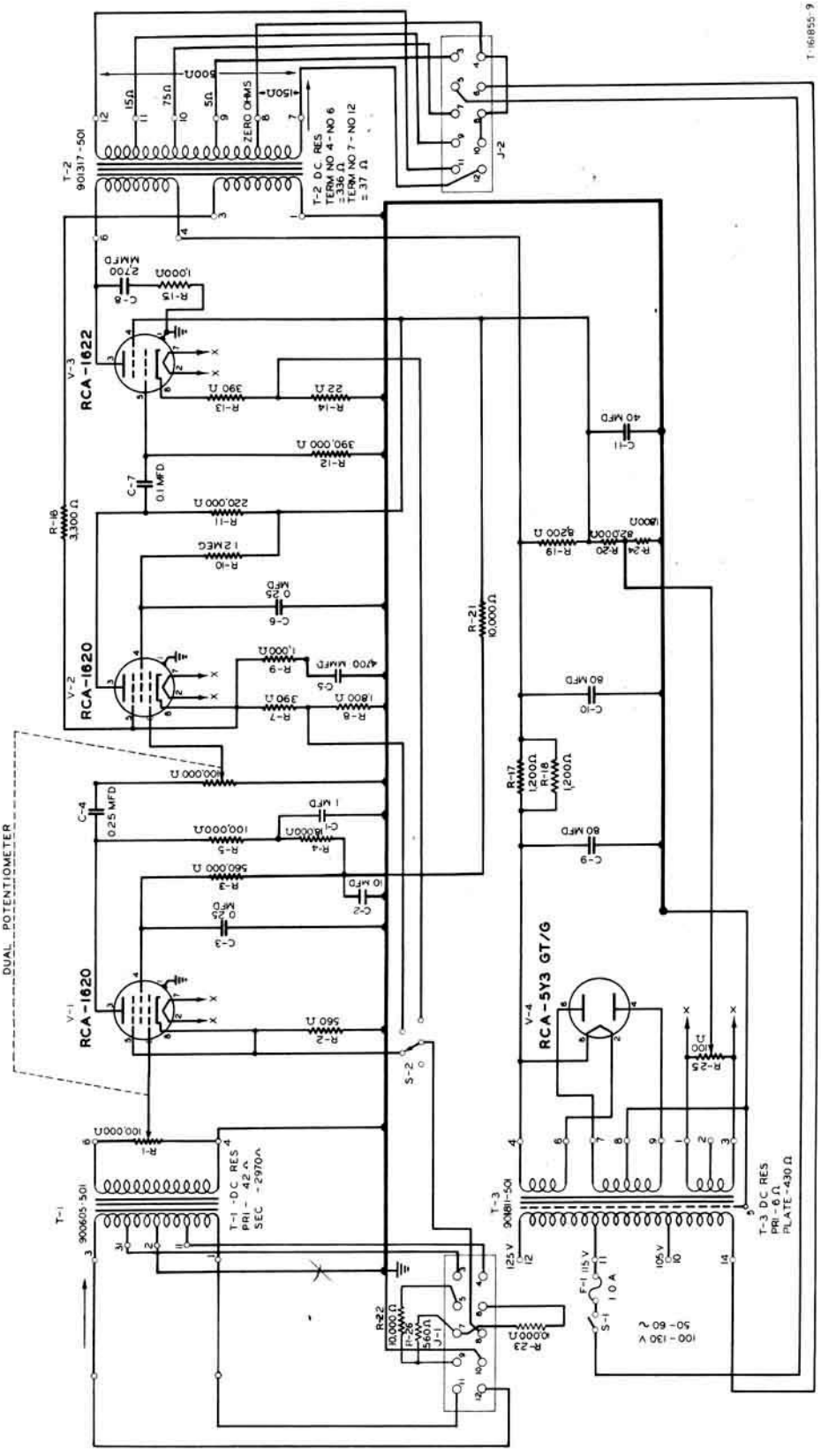

Figure 2—Schematic diagram of Type BA-3C Program Amplifier.