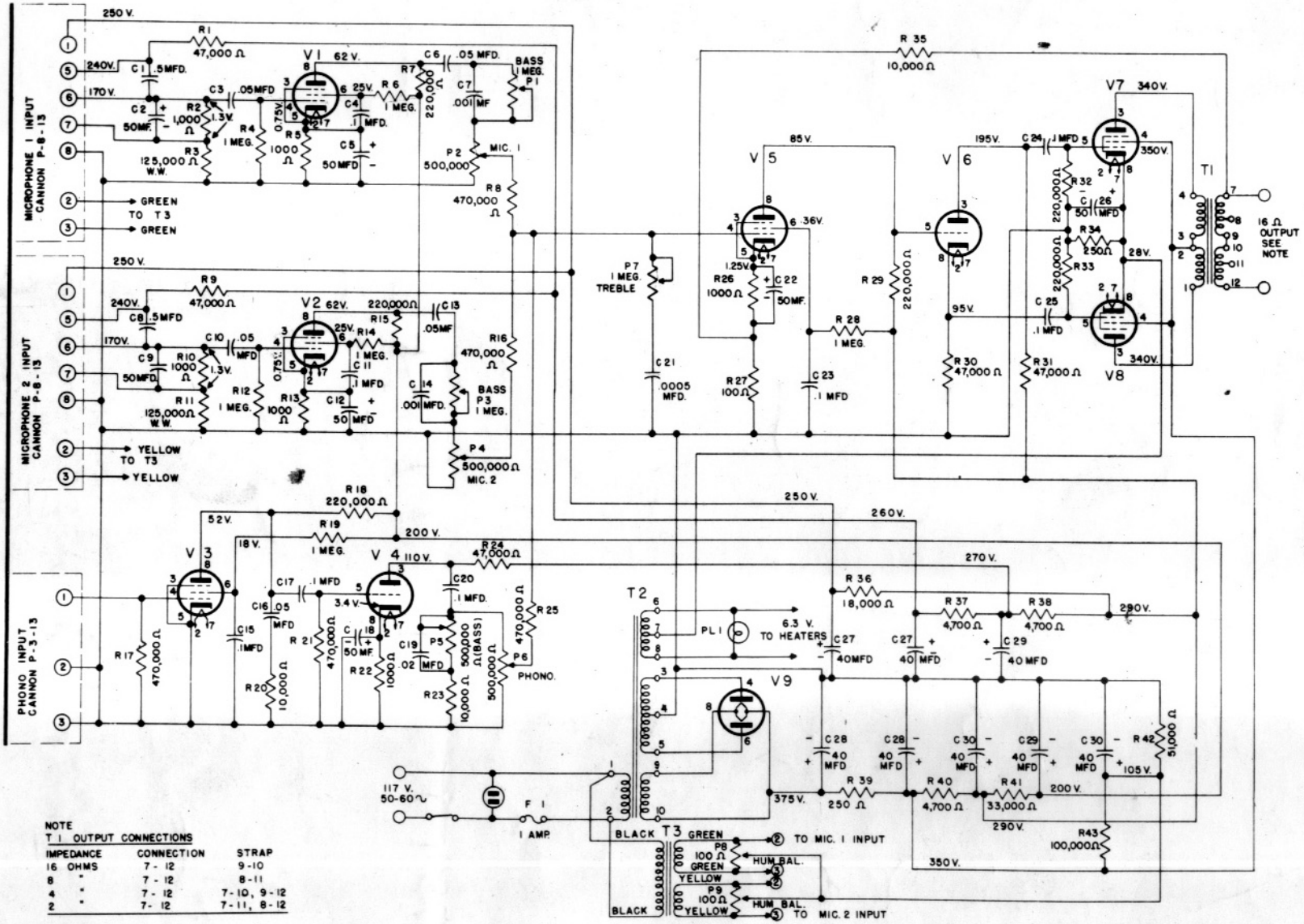

NOTE

T1 OUTPUT CONNECTIONS

IMPEDANCE	CONNECTION	STRAP
16 OHMS	7 - 12	9-10
8 "	7 - 12	8-11
4 "	7 - 12	7-10, 9-12
2 "	7- 12	7-11, 8-12

PARTS LIST	
V1,2,3,5	6SJ7 R.C.A. OR EQUIVALENT
V4,6	6J5 " " "
V7,8	6L6G " " "
V9	5U4G " " "
T1	ALTEC LANSING 16173 Ω
T2	" " 5786 Ω
T3	" " TMX-551
C1,8	.5 MFD 400 V. ASTRON ML-4-5
C2,5,9,12	50MFD 25V MALLORY TC 29
C22,18	" " " "
C3,6,10,13,16	.05 MFD 600 V. MALLORY TP415
C4,11,15,17,20	.1 MFD 600 V. MALLORY TP418
C23,24,25	" " " "
C19	.02 MFD 600 V. MALLORY TP412
C21	.0005 MFD 500V. MALLORY
C26	50 MFD 50V. MALLORY TC 39
C27,28,29,30	40X40 MFD 500V. SOLAR S6974
R1,9,24,30,31	47,000 OHMS 1 WATT
R2,5,10,13,22	1,000 OHMS 1/2 WATT
R26	" " " "
R3,11	125,000 OHMS W.W. CINE ENG. 8-12 ± 1%
R4,12	1 MEG. 1/2 WATT
R6,14,19,28	" 1 WATT
R7,15,18,29	220,000 OHMS 1 WATT
R8,16,17,21,25	470,000 OHMS 1/2 WATT
R20,23,35	10,000 " " "
R27	100 " " "
R32,33	220,000 " " "
R34,39,	250 " 20 WATTS, OHMITE
R36	18,000 OHMS 1 WATT
R37,38,40	4,700 " "
R41	33,000 " "
R42	51,000 " "
R43	100,000 " "
P1,3,7	1 MEG. STACKPOLE TYPE LR, CURVE 3C
P2,4,5,6	1/2 " " " " "
P8,9	100 OHM WIRE WOUND IRC W-100
F1	1 AMP. LITTELFUSE SLO BLO NO. 1268
S1	S.P.S.T. ROTARY H&H 1561
PL1	NO. 44 MAZDA

OPERATING DATA
MAX. GAIN - MICROPHONE INPUT NO. 1 & 2 - 110 DB
" " PHONO INPUT (AT 1,000 CPS) 106 DB
FREQ. RESPONSE — SEE GRAPH DWG. NO. 4303
NOISE LEVEL - FULL GAIN MIC. INPUT 1 & 2 -35 DB -27.2 DBM
" " " " PHONO INPUT -30 DB -22.8 DBM
POWER OUTPUT AT 8% INTERMODULATION OR 2% TOTAL HARMONICS — 15 WATTS
REF. 0 DB = .006 WATTS " 0 DBM = .001 "
VOLTAGE MEASURED WITH 20,000 Ω / VOLT METER AT 117 V.A.C. PRIMARY & 2 150 A BASES OPERATING

ALTEC LANSING A-332A AMPLIFIER

10851-3